AIDKA

AUSTRALIAN INDEPEDENT DIRT KART ASSOCIATION

2025 RULE BOOK

FOR DRIVERS/PIT CREW/OFFICIALS

2025 RULE BOOK AVAILABLE ONLINE ONLY

Version: 22nd September 2025

CONTENTS

	PAGE
2025 CONTACT DETAILS	3
DEFINITIONS	4
ADMINISTRATIVE & GENERAL REQUIREMENTS	
Administration	6
Calendar of Events	6
Rules of Racing (Rule Book)	7
Rule Changes (Incl Supp Regs)	8
Licences	9
Types of Licences	10
Logbooks	11
Classes	12
Officials and their Duties	15
Protests & Appeals	19
Behaviour	20
Consumption of Alcohol & other Drug related substances	21
Smoking	22
GENERAL COMPETITION REQUIREMENTS	
General Competition Requirements	24
Rules of Racing	27
The Pits	30
Racing Format	31
Flags and/or Lights	32
Race Formats	33
Points System	36
TECHNICAL REQUIREMENTS	
Protective Clothing	38
Weights	40
Kart Formula	41
Number Plates & Numbers	45
Fuel & Oil	48
Fuel Testing Procedures	49
Illegal Equipment/Fuel/Motors	54
Cylinder Head Volume Measurement	56
CLASS/ENGINE SPECIFICATIONS	
Midgets	58
Rookies	58
J Junior	59
KT100S	66
IAME Parilla 125cc X30	68
IAME Parilla 125cc LEOPARD RL	71
BOMBARDIER ROTAX FR125 MAX	73
PRD Fireball 125cc	83
PRD Galaxy 125cc	85
APPENDIXES	
Title Information	88
AIDKA Penalties	91
AIDKA Track Safety	100
AIDKA List of Fees	101
AIDKA Junior Training Program	102
Engine Sealing Methods	103
CODE OF CONDUCT	104

2025 CONTACT DETAILS

Website: www.aidka.com.au

AIDKA SECRETARY:	**Kylie Thompson** Phone: 0400 114 135 Email: secretary@aidka.com.au
AIDKA GENERAL MANAGER	**Tony Dunn** Phone: 0418 853 207 Email: generalmanager@aidka.com.au
AIDKA LICENCE ENQUIRIES	**Janelle Hammerstein** Phone: 0477 937 927 Email: licencing@aidka.com.au
PUBLIC OFFICER	**Neville Clarke** Phone: 0418 824 184 Email: publicofficer@aidka.com.au

Purple Text = Updated 30th Sept 2024 – Correction Rule 25.3 2a (removed reference to Power Plus 98+) and Rule 8.13 (corrected reference rule numbering)
Blue Text = Aug, Oct & Dec Rule Changes, 2025 AIDKA Fees (version 1st February 205)
Blue Highlighted = Correction to errors, changes to Rule Change Process in line with Regulations, and technical update
Purple Highlighted = August 2025 Rule Changes, Midget Tyres, Fuel Testing Procedures and AIDKA Penalty Handbook. (Version 22/09/2025)

DEFINITIONS

AIDKA:	Australian Independent Dirt Kart Association Inc.
Official Rules and Constitution:	Is the copy of the Rules and Constitution held by the Secretary of each affiliated Club. It is not the Rules of Racing book held by competitors.
AIDKA Colours:	Green and Yellow.
Force Majeure:	Weather and track safety which the organisers have no control over and results in an Event not being completed.
Supplementary Rules/Regulations:	Means rules and/or regulations other than those set out in AIDKA rules, Regulations or Governing documents.
Licence:	Certificate of registration issued to a person wishing to compete in AIDKA Dirt Kart Events.
NFF:	No Faults Found (To be recorded in AIDKA Logbook).
Race Year:	1st February one year to 31st January the following year.
Club Premises:	All areas under control of the affiliated clubs and shall include driveways, carpark, canteen, pit area and public viewing area.
Competitive Meeting:	Where a Driver has nominated and competed in the draw.
Race Meeting:	Commences from the time of entering club premises and concludes at the closing of club premises.
The Start:	The moment when the order is given to start racing to the competitors.
Red Zone:	Defined as a minimum of the in and out grids (so long as fenced or bunted and sign posted from general public) and the race arena.
ATV:	All-Terrain Vehicle(s) or like Vehicle(s).
PULP:	Premium Unleaded Petrol
Remote Tracks:	Alice Springs Karting Club, Top End Dirt Karts and Weipa Kart Club.

AIDKA

Australian Independent Dirt Kart Association

ADMINISTRATIVE & GENERAL REQUIREMENTS

Administration
Calendar of Events
Rules of Racing (Rulebook)
Rule Changes (Incl Supp Regs)
Licences
Types of Licences
Logbooks
Classes
Officials and their Duties
Protests & Appeals
Behaviour
Consumption of Alcohol & other Drug related substances

ADMINISTRATION

Rule #

1.1 The joining fee for Affiliation to AIDKA (listed in Appendix "D") is to be set at each AGM. Affiliation shall be implemented upon receipt of the joining fee by the AIDKA Treasurer.

1.2 An annual fee for Affiliation to AIDKA (listed in Appendix "D") is to be set at each AGM and is payable to the AIDKA Treasurer to be deemed financial. Affiliation shall be implemented upon receipt of fee.

1.3 Any new club joining AIDKA must comply with all safety rules immediately. Other rules must be adhered to within 12 calendar months from date Affiliation acceptance by AIDKA.

1.4 Insurance Policies only cover members of AIDKA Affiliated Clubs. Association Liability Insurance shall be administered by AIDKA on behalf of affiliated clubs.

1.5 All Drivers shall be members of an Ambulance fund or shall be suitably insured for Ambulance travel. Ambulance cover is an AIDKA requirement.

1.6 Drivers racing at a suspended or expelled Club do so at their own risk and in no way are they covered by any AIDKA Insurances.

CALENDAR OF EVENTS

Rule #

2.1 The Association shall collate all Club race season calendars and arbitrate in the event of date clashes.

2.2 All Clubs are to submit a partial season race calendar indicating the preferred dates for Blue Ribbon Events (Club, State, and Territory Championships), long standing annual events to AIDKA Secretary by 31st May of each year.

2.3 All Clubs are to submit a season race calendar to the AIDKA Secretary by September 30th of each year.

2.4 All Events on the Official AIDKA Calendar shall be deemed to be sanctioned unless notification is sent to the affiliated Club Secretary. Sanction must be sought for Special Events or Events not mentioned on the AIDKA Calendar. Application for a sanctioned Event must be in the hands of the AIDKA Secretary at least 30 days prior to the Event (to arrange specific Insurance Policies etc.).

2.5 12 race meetings (South Australian clubs 9 race meetings) including 1 Blue Ribbon Event per Club per year plus 4 Education Days/ Promotional Days per year. Remote clubs (no club within 500km) are eligible for 12 practice days per year. States with less than 6 clubs may have 8 Education/Promotional Days per year. 2 of these days are to be dedicated to Junior Licence grades only. 1 of these days are to be dedicated to un-Licenced people only.

2.6 Club Events/Open Meetings are to be sanctioned as 1 Event/Meeting conducted over 1 day or 2 consecutive days. If a Club Event/Open Meeting is conducted over 2 consecutive days, it will be 1 Event/Meeting. A maximum of 3 Club Events/Open Meetings per affiliated Club in 1 calendar year may be conducted over 2 consecutive days and will have been included in the AIDKA Calendar of Events. All Club Events/Open Meetings conducted over 2 consecutive days may incur an additional Insurance Premium and payable by the affiliated Club hosting the Event/Meeting.

2.7 All clubs are allowed 1 day per year as BRE. Any club running a 2-day event will have this counted towards 2 race meetings on their calendar. A BRE cannot be run as part of a 2-day meeting.

2.8 Rain out days can be rescheduled providing they do not clash with a BRE or Title event. Changed race dates to be approved via the Calendar Committee.

2.9 Clubs that cancel due to low nominations will forfeit that race day event. Remote clubs are exempt from this rule.

2.10 Interstate Clubs can schedule non BRE race events against other Interstate Titles. Australian Titles will be regarded as a national BRE and no club can hold any race events on these dates.

2.11 A club cannot schedule or run events at another club unless their club premises is deemed unusable, and the change approved by the AIDKA Executive.

2.12 Any race meetings not submitted as per rule 2.5 from individual clubs as at 30th September will be forfeited.

2.13 All clubs will have the opportunity to purchase 3 additional race meetings once the calendar has been finalised and released. The option of purchasing additional meetings will expire once the insured number of meetings is fulfilled. These additional meetings will be at a fee set annually at the AIDKA Annual General Meeting. These meetings must also comply with the following conditions.

- **Additional meetings must be submitted 30 days prior to the event.**
- **All additional fees must be paid in full prior to the event.**
- **Additional meetings must not be on any weekend where another club within 250km has a race meeting on that same weekend.**
- **Must have approval from the Calendar and Events Committee**

RULES OF RACING (Rule Book)

New #

3.1 The AIDKA Rules of Racing shall be available to all members of the Association.

3.2 Rules of Racing made or updated at AIDKA meetings will be enforced and adhered to once the official Rules of Racing and Constitution have been updated.

3.3 It is a Licence holder's responsibility to make themselves fully acquainted with the official Rules of Racing and Constitution.

3.4 It is the AIDKA affiliated clubs' responsibility to abide by the Rules of Racing and Constitution. Failure to do so may result in the suspension or expulsion of that affiliated club.

3.5 Interpretation of Rules of Racing shall be decided by the AIDKA Executive committee whose decision shall be final.

3.6 AIDKA make no pretence of having designed a fool proof set of Rules of Racing and Regulations, nevertheless Drivers, Crews and participants are required to abide by both the Rules of Racing and the spirit of the Rules of Racing.

RULE CHANGES (Including Supplementary Rules & Regulations)

New #

4.1 AIDKA Board to form a sub-committee to refine the Rules of Racing. Any changes shall be forwarded to Affiliated clubs and published on the Website.

4.2 i) All rule changes that are proposed from clubs, Board or Sub Committee shall be submitted to the AIDKA Secretary on the AIDKA Rule change form. The Rule Change Form will include as a minimum; Club contact for discussion, old rule, new rule, rationale and whether implementation is immediate or beginning of the following racing calendar year.

ii) The Secretary will forward the proposal to the Rule Change Panel (RCP) who in conjunction with the nominated representative from the clubs, Board or Sub Committee shall discuss the proposed rule change (by electronic means) for intent, suitability, functionality and contradictions.

iii) Any rewording to the proposal must be approved by the club clubs, Board or Sub Committee representative before the proposal is finalized by the RCP

iv) Rule Change Panel has the power to decline a rule submission. If submitting party is not in agreeance, then the Board will have casting vote whether the rule is presented for voting and implementation.

v) The Rule change proposal will be included in the next council agenda, where clubs will be given an opportunity to discuss the proposal.

vi) The proposal will then be sent to the clubs, who will have 28 days to vote via email to the AIDKA Secretary

vii) Safety/Technical rules will still be subject to Rules 4.4, 4.5 and 4.6.

4.3 Safety rules and regulations may be approved by the AIDKA Board and/or AIDKA Rule Change Panel at any stage. Updates to the Rules of Racing concerning safety may be made from time to time without re-issue of the Rules of Racing, All Drivers shall race under the updated official Rules of Racing and Constitution, a copy of which will be held by the Secretary of each affiliated club.

4.4 Technical rules and regulations may be approved by the AIDKA Board and/or AIDKA Rule Change Panel at any stage. Ie: Rules that are unworkable or that must be clarified during the year.

4.5 Any change of rule/regulation will be posted on the AIDKA website as an amendment to the current rule book and notice sent to all clubs of updates.

4.6 Once a rule has been implemented, it must remain in force for a period of 12 months (without change) unless found unworkable or due to safety issues arising

4.7 AIDKA Clubs, Board or Sub Committees members may submit a Supplementary Rules and/or Regulations proposal in writing to the AIDKA Secretary at any time. The AIDKA Secretary will forward any Supplementary Rules/Regulation proposals to the AIDKA Rule Change Panel.

4.8 The AIDKA Rule Change Panel shall be responsible to evaluate new Supplementary Rules/Regulations and modify them as required. All formats must be submitted to AIDKA Rule Change Panel. 14 days prior to the event and must not contravene safety.

4.9 AIDKA has the right to approve all or part of the Supplementary Rules and/or Regulations applied for and may stipulate added precautions. AIDKA also has the right to refuse any application that is not in the interest of safety or the Association.

4.10 Supplementary Rules and/or Regulations relating to an event will only be enforced during the event.

4.11 Supplementary Rules and/or Regulations relating to a Club shall remain in force until AIDKA removes approval.

4.12 Supplementary Rules and/or Regulations will be issued to all Clubs for inclusion in the official Rules and Constitution book(s) held by the Secretary of each affiliated Club.

4.13 Supplementary Rules and/or Regulations may be granted as an additional rule or regulation that is applicable to race event(s) or club(s). All AIDKA Rules in regard to Safety cannot be supplemented.

4.14 If a supplementary Rule/Regulation is submitted 2 times in a 12 month period and is defeated each time, it shall be ineligible to be submitted again for 2 years from the date of the AIDKA Council meeting at which the second submission was defeated.

LICENCES

Rule #

5.1 AIDKA Club Affiliation fee shall be received by the AIDKA Treasurer from the Affiliated Club prior to any Licences being issued to their members.

5.2 All persons applying for an AIDKA Licence shall be a member of an AIDKA Affiliated Club. An AIDKA Licence holder must remain a member of an affiliated club at all times whilst the AIDKA Licence is valid.

5.3 Application for a Licence to drive at an AIDKA Affiliated track, a Licence for an Official or a Licence for Pit Crew shall be made on the official AIDKA form under the terms and conditions as set out there on.

5.4 All persons applying for an AIDKA Licence must declare their Date of Birth for identification purposes.

5.5 Any person, on accepting an AIDKA Licence (the Licence holder), shall comply with all the rules and regulations of AIDKA and be responsible for any infringements of them.

5.6 AIDKA may refuse to issue a Licence without giving any reason for such refusal.

5.7 AIDKA Licences may only be used at AIDKA Affiliated clubs/tracks unless prior approval has been provided by AIDKA.

5.8 All Licence holders shall receive a Logbook from their Club Licence Secretary. The current AIDKA Rule book is available via the AIDKA Digital App or the AIDKA website.

5.9 If a Licence holder inadvertently destroys or loses their logbook, they must immediately notify the AIDKA Secretary, pay the appropriate fee to AIDKA (as per Appendix D) and apply to the AIDKA Executive for a reissue. Logbook to be stamped or noted replacement, and any penalties already imposed entered before reissued by AIDKA.

5.10 Drivers are not able to nominate for club or Title meetings until such time they have their Licence. No person is authorised to compete or participate unlicensed.

5.11 The holder of an AIDKA Licence shall produce and/or surrender their Logbook when requested by an Affiliated Club or AIDKA Official at an AIDKA sanctioned Event or individual Affiliated Club Committee and/or AIDKA Committee. Failure to do so will incur an additional penalty.

5.12 NO Licence refunds will be given on any Licence application other than for medical reasons that prohibits the Licence holder from using their Licence for that Licence period. This must be proven with a medical certificate for a Licence that is current and has not been used.

5.13 If an affiliated club suspends a member, that member must surrender their AIDKA Logbook to the individual club which will be returned to the AIDKA Secretary to be held until the period of suspension has expired.

It is the suspended member's responsibility to contact their club's Secretary who will contact AIDKA Secretary once suspension is over for return of Logbook and reinstatement of digital license.

5.14 Drivers under medical treatment shall produce a medical certificate before racing.

5.15 Suspended drivers are not able to nominate for any club or title meetings until such time their licence suspension has been fulfilled. This includes nominating for any event where nominations close prior to suspension completion date and scheduled to race after suspension has been served.

TYPES OF LICENCES

Rule #

6.1 **Official** Licence

6.2 **Pit Crew** Licence

6.3 **Senior** Drivers Licence Grades:

A-Grade	200cc, KT Twin, Outlaw (Min age 17 yrs)
B-Grade	100cc, 125cc (Min age 16 yrs)
C-Grade	All KT's (Min age 14 yrs)

6.4 **Junior** Drivers Licence Grades:

Junior	9 until 15 years old
Rookie	7 until 11 years old
Midget	5 until 7 years old

6.5 **Probationary** Drivers Licence
If a Drivers Licence is expired longer than 5 years, the Driver shall be required to run Rear of Field (ROF) for a minimum of 3 meetings. Drivers with Licences expired longer than 2 years, but less than 5 years, shall be required to do a minimum of 1 meeting ROF and required to be signed off by the Chief Steward.

a) A Probationary Driver is a Driver who has not held an AIDKA Drivers Licence for the past 2 years. AIDKA Affiliated Club Officials may from time to time determine a Driver to be a Probationary Driver and issue that Driver with a Probationary Licence.

b) A Probationary Driver will have to complete at least 3 meetings at the ROF. Stewards can endorse their Licence at the end of the meeting if they have completed the minimum required heats and the stewards are satisfied with the ability of the Driver to compete in the draw. If the Stewards are not satisfied with the Drivers ability to compete in the draw then the Probationary Driver will need to compete in additional meetings ROF. Only one Probationary endorsement may be given at each race meeting.
To constitute a completed race meeting for the purpose of signing logbooks, the following minimum number of heats must have been completed for one class only.
3-5 races held - Minimum 3 completed
6 races held - Minimum 4 completed
7 or more held - Minimum 5 completed

c) While a Probationary Driver, the Driver shall display a "P-Plate" at the rear of the kart.

d) Logbooks are to be handed to the Chief Steward at the Drivers briefing and returned to Drivers appropriately endorsed at the end of the race meeting.

e) If the stewards are not satisfied with the ability of the driver to compete in the draw, a chief steward has the option to send the driver ROF for the remainder of the meeting and the driver must complete an additional 2 meetings as a probationary driver and require signatures before being able to compete in the field.

6.6 To upgrade to an A Grade licence a driver shall obtain 4 probationary signatures at a minimum of two different tracks. Remote tracks exempted where 6 meetings required at the single track. To gain the signature there also must be a minimum of 5 nominations of that grade to compete against.

6.7 Single Event Licence
Competitors may apply for a Single Event Licence to participate in AIDKA sanctioned events without possessing a full AIDKA Licence and must comply with all requirements as per the Single Event Licence application on the AIDKA Website.

a) Single Event Licence holders must be a member of an AIDKA affiliated club. The Single Event Licence will only be issued via the AIDKA website.

b) A maximum of 2 Single Event Licences may be issued to the same person during a racing season for competition divisions, after which a full Licence must be applied for.

c) The applicant must run rear of the grid. For the purposes of using QuickGrid, these Drivers must have their entry noted as a 'Probationary' Driver. This will put them behind 'ROF' Drivers.

d) A Single Event Licence cannot be used at an AIDKA Title event.

e) A Single Event Licence will not count for Probationary signatures.

f) Drivers cannot apply for a Single Event 'A-Grade' Licence.

6.8 Casual Passes
A Casual Licence holder becomes a temporary member of that AIDKA Affiliated Club. When a casual pass is purchased, and they complete an Official Registration form on the day as set by AIDKA they are then permitted to drive at a meeting in a novice session with Non-Licenced Drivers or at a scheduled Education meeting under the strict supervision of track officials.

a) Casual Pass Registration forms shall be retained by the affiliated club issuing the casual pass.

b) The Casual Licence may be used as a Licence to allow entry of unlicensed people into the pits. Under 5yrs of age and over 90yrs of age are permitted but will be uninsured.

c) In the event of an applicant suffering from a medical condition which may affect the applicant's control of a kart, the applicant shall furnish a Medical Certificate, issued not more than 30 days previously, reporting on their physical condition. This Certificate may cover any other condition which may impair a Driver's ability to drive safely. Certificate must be presented to the AIDKA Secretary**. The Medical Certificate must contain the words "fit to compete in motorsport".**

LOGBOOKS

Rule #

7.1 All Licence Holders will be issued with a Logbook from their club when they receive their Digital Licence.

7.2 The Nominating Secretary or person in charge of accepting nomination money, shall sign the Drivers Logbook. This person will also fill in the current date, hosting Club and Class(es) in which the driver has nominated, also ensure that the Digital Licence has correct Licence grade for that Driver. In the case of Pit Crew/Official; date, club, 'PC' or 'Off' and signature will be entered.

7.3 Drivers shall hand their Logbook to a Scrutineer when requested. If no faults are found the Scrutineer will note "N.F.F." in the Comments/Section and sign the Logbook. If the kart is safe but does not comply with all AIDKA Rules of Racing, the offending Rules of Racing are written in the Comments/Section and the Logbook is signed. This is so the Scrutineer at the next meeting may ensure prior faults are fixed.

7.4 All points and penalties shall be shown in the Logbook and entered on the Lap Scorers Sheets.

7.5 A driver may only race in a class they have paid nominations for and is entered in drivers Logbook. A driver may, (subject to the Chief Steward's permission) undertake kart tuning in another class so long as it is undertaken at ROF and does not take part in competitive racing.

CLASSES

Rule #

8.1 Drivers are not permitted to race whilst under Workers Compensation.

a) To compete in a class, you must have the appropriate Licence grade or a higher grade for that class.
A Driver wishing to race in a class higher than their current Licence grade must start ROF until they have 3 Licence grade endorsements (or 4 Licence grade endorsements for A-Grade – See Rule 6.6). They will then be eligible to upgrade to that Licence grade.

b) Midgets, Rookies and Juniors, as defined in these Rules of Racing, may not compete in Senior events

c) No person under the age of 9 years shall participate in competitive events. Drivers under 9 years shall have the emphasis on education and skills.

8.2 Midget

a) Demonstration training class only

b) Midget Drivers are defined as Drivers from 5 years of age until their 7th birthday. Once they turn 7, they <u>must</u> go into the Rookie class unless an exemption has been granted from the AIDKA Executive.

c) Engine Specifications as per Rule 28

8.3 Rookie

a) Non-Competitive class.

b) Rookie Drivers are defined as being 7 years of age up to 11 years of age. At the age of 9 years old the Driver may elect to become a Junior or continue as a Rookie Driver until their 11th birthday. Once 11 years old they <u>must</u> go into a Junior class unless an exemption has been granted from the AIDKA Executive.

c) Engine Specifications as per Rule 29

8.4 Junior – Light, Heavy

a) Junior Drivers are defined as being 9 years of age up to 15 years. At the age 14 the Driver may elect to become a senior Driver or continue as a junior Driver for the remainder of the Licence year or until their 15th birthday.
Once 15 years old they <u>must</u> go into a senior field unless an exemption has been granted from the AIDKA Executive. Once electing to become a senior Driver, he/she

must upgrade their Licence to a senior Driver and by doing so will no longer be eligible to participate in junior events. They must hold a senior Probationary Licence before participating in any senior field.
At the age of 14, Junior Drivers may participate in a KT senior kart (C-Grade Licence) at Education days. Only Licenced Juniors can be on the track at this time, they must not be on the track at the same time as senior Drivers in any circumstances.

b) Single Yamaha KT100J engine as per Rule 30

8.5 KT – Light, Medium, Heavy

a) Senior Driver

b) Single Yamaha KT100S engine as per Rule 31.

8.6 KT – Ladies (Non-competitive class, demonstration only)

a) Kart and Driver weight to be a minimum of 120kg

b) If a lady chooses to race in KT Ladies, then they may not race in any other KT class on the day.

c) This class is a demonstration class and does not count towards Probationary signatures. They may however after starting 3 meetings at the rear of field of KT Ladies, start in the draw in KT Ladies only. If they race in an open KT class, they must start at the rear until they complete their normal probationary period.

d) This is a non-competitive class and is not to be contested at any Title events.

8.7 Statesman

a) Restricted to Drivers who are 40 years of age or over.

b) Single Yamaha KT100S engine as per Rule 31.

8.8 125– Light, Medium, Heavy

a) Minimum age 16 years

b) The only eligible engines are the IAME Parilla 125cc LEOPARD RL as per Rule 33, ROTAX FR125 Max as per Rule 34, PRD 125cc Fireball as per Rule 35, IAME Parilla 125cc X30 as per Rule 32, and the PRD 125cc Galaxy as per Rule 36.

c) Technical specifications for these engines are available on the AIDKA website www.aidka.com.au

d) No evolution components are permissible without approval from the AIDKA technical committee.

8.9 100cc Open

a) **Minimum age** 16 years

b) Any single cylinder engine that is or has been CIK homologated, air or water cooled 100cc engine + 10%

c) Parts are interchangeable from similar style engines

8.10 KT Twin

a) A driver must be 17 years or older to apply for an A-Grade Licence

b) Two Yamaha KT100S engines as per Rule 31.

c) Left hand conversion allowable on Left hand motor only.

d) No clutches allowed

e) Header pipe may be modified to suit chassis but length and inside diameter must comply with Rule 31.5

8.11 200cc Open

a) A driver must be 17 years or older to apply for an A-Grade Licence

b) 130cc to 200cc (+10%)

c) No clutches allowed

8.12 Outlaw

a) A driver must be 17 years or older to apply for an A grade licence.

b) Any motorcycle manufactured brand single cylinder 2 or 4 stroke motor up to 250cc + 10%

c) Must run with gearbox, fully operational clutch, not exceed acceptable noise levels and have an operational kill switch.

d) All karts with gearboxes must run under outlaw specifications.

e) Must run a rear wing fitted horizontally behind the driver, manufactured from plastic or fibreglass and must conform to the following specifications. Width tube a maximum of 90% and minimum of 45% of kart width measured at the widest point of the side pods, length to be between 100mm and 250mm, height to be a maximum of 850mm measured from the ground level to the highest point of the wing and has a minimum height 375 mm. The leading edge shall be no closer than 75mm behind the seat measured between two vertical edges in parallel. Leading and trailing edges must be rounded, must be non-adjustable while in motion, no part of the radiator (if fitted) shall protrude above the lowest part of the wing. Side number plates must be fitted. All scrutineering of the wing specifications shall take place post-race meeting only. No roll cages and torsion bars (wing supports and wings acceptable).

8.13 All karts must comply with all regulations Rule 22 - **22.13**, plus any additional and overriding class specifications listed within this book.

OFFICIALS AND THEIR DUTIES

Rule #

9.1 All officials at AIDKA affiliated race meetings shall hold the appropriate license where required. All officials entering a RED Zone shall be signed in on the day. Failing to sign in may result in a penalty.

9.2 The same person may, if the AIDKA affiliated Club decides to do so, undertake several official duties.

STEWARDS

9.3 Each Club will nominate 1 person to the National Steward Coordinator and AIDKA, to act as their Chief Steward who will be responsible for administering the Rules of Racing and Regulations as set out by AIDKA This person may elect another accredited steward on the day or prior to a meeting to act as Chief Steward. The Steward(s) shall have the authority to):

a) Enforce the Rules of Racing as laid down by AIDKA

b) Adjudicate over any disputation to arise during a race meeting.

c) Decide and impose penalties for any breach of the Rules of Racing.

d) Notify the Driver of any penalty imposed either personally or via the Driver's representative.

e) Prohibit from competing any Driver or kart which is considered to be dangerous as reported by officials.

f) The Stewards on the day may ask to have a kart scrutineered at any time. This kart must be scrutineered before any Driver is allowed to drive this kart (practice or racing).

g) Expel from the grounds any person(s) who refuses to obey the instructions of an official.

h) Postpone or alter the conditions of a competition for reasons of safety or 'Force Majeure'.

i) Appoint temporary substitutes to replace Stewards unable to perform their duties.

j) Authorise alteration of the official program.

k) Accept a correction by a Judge.

l) Allow a Title or meeting to be declared after four heats for reasons of safety or 'Force Majeure'.

m) Stewards have the authority to deduct a nominal number of points at any time.

n) At any race meetings with over 100 nominations clubs must have a minimum of 2 stewards.

o) Probationary stewards can start from 16 years old but must work under a senior steward. Senior stewards to be a minimum age of 18 years old.

RACE DIRECTOR

9.4 a) Be responsible to the Chief Steward for the conduct of the meeting and its administration in accordance with the official program, AIDKA rules and regulations.

b) Be satisfied that all official positions and necessary requirements are fulfilled and actioned.

c) Liaise with all parties including Chief Steward, club representative, Track crew, first aid and any other as required on behalf of chief steward to remedy issues and actions to keep the meeting on schedule.

d) Race Director will have no appointed stewarding or official's role at a title event.

e) Race Director shall hold State or National Steward's Accreditation.

f) The appointment of Race Director at title events shall be the decision of the AIDKA President, Chief Steward of the event and a host club representative.

g) The position of Race Director is a requirement at all AIDKA Title events.

h) The position of Race Director may be used at club events.

SCRUTINEER

9.5 The Scrutineer(s) shall be responsible for checking the compliance of karts to these Rules of Racing. Each kart must be examined by the Scrutineer(s) if requested and if satisfactory, marked to indicate compliance.

a) Prior to practice/racing commences all probationary nominated drivers must have their karts scrutineered. The club may elect to scrutineer up to an additional three classes prior to practice/racing. Scrutineer(s) must conduct random checks on the out grid and/or in the pit area throughout the duration of a practice/race meeting. A competitor may request their own kart be scrutineered by an Official Scrutineer at any stage.

b) Before a Driver is permitted to drive a kart (practice or racing) the driver must pay Nominations, sign in and confirm kart number (write in Drivers logbook) and have kart scrutineered if requested by an official Scrutineer. It will be at the club's discretion if nomination or required scrutineering is done 1st. Preferred method to be posted on Clubs website. Required classes to be scrutineered will be notified by notification via AIDKA App.

c) It is the Driver's responsibility to present their kart and safety equipment to the Scrutineer in a clean, race ready condition at scrutineering.

d) Helmet details are to be recorded and signed by Scrutineers in the Drivers Logbook prior to first practice or race meeting of a new season and a sticker applied to the back of the helmet.

e) Ensure Logbook procedures are carried out.

f) A go-kart which is judged to be unsafe by the Scrutineer shall not be driven until the go-kart is considered safe by the Scrutineer.

g) Report any irregularities to the Owner/Driver.

h) Request the rectification of any unsafe irregularities before using the kart.

i) Note any unsafe irregularities in the Driver's Logbook.

j) Notify the Steward(s) should a Driver/Owner choose to ignore Rule 9.5(g)

k) If minor faults have not been rectified by the following meeting, the kart will not be permitted to race.

l) The kart shall be marked in an easily visible position with identification showing the kart has been scrutineered.

m) Be available during the course of the meeting to examine karts involved in accidents as directed by the Steward(s).

n) All karts and helmets involved in any accident must be scrutineered before racing again.

o) All karts to be scrutineered in racing condition with any adaptations to suit Junior Drivers.

p) All motors must be fitted with the appropriate sealing nut as per Appendix F.

PIT / GRID MARSHALL

9.6 Be responsible for the organisation and control of the pit area.

a) Check that all karts have taken up the correct grid positions and are ready to enter the track when requested.

b) Check that all Drivers are ready to form up into their grid position when the preceding Event has entered the First lap.

c) Send Drivers to the rear of the grid when they are deemed to be delaying the meeting.

d) Check that karts have the correct scrutineering identification displayed.

e) Notify the lap scorer(s) and Steward(s) of any alterations to the program as soon as practical.

STARTER

9.7 Notify Drivers to form up with crossed green and yellow flags or operational light systems.

a) Start and finish a race.

b) In the Event of a false start or poor grid formation has the authority to send offending Driver/s to the rear of the field.

c) Assist the Steward(s).

d) Communicate with the Drivers through flags, lights and boards as necessary.

e) Starter must hold a current Stewards accreditation.

LAP SCORER(S)

9.8 Collate and record the finishing order for each kart in all classes.

a) Collate and record points scored by each kart in all classes.

b) Assist the Steward(s) in the event of a restart when requested.

c) Notify the Pit Marshall(s) of the starting order for finals as necessary.

DRIVERS REPRESENTATIVE

9.9 Be available to receive any protest, query, or complaint from a Driver. Ensure a Driver under 18 years old taken to a Steward is accompanied by parent/guardian.

a) All Drivers must be accompanied by a Driver Representative when called to Chief Steward.

ENGINE MEASURER

9.10 Be available for the purpose of engine measuring when required.

a) Organise to have the appropriate measuring equipment available as necessary.

b) Ensure that all engines presented for inspection comply with the specification for that class.

c) Report any irregularities found during engine measurement directly to the Chief Steward.

d) Engine Measurers must not measure engines they have built.

e) If consent is not given for an engine to be fully inspected by the Engine Measurers, then the Driver will forfeit his or her position for the meeting in that class and may face further disciplinary action as determined by the Chief Steward and/or AIDKA.

PROTESTS & APPEALS

Rule #

10 AIDKA Protests and Appeal Committee shall consist of 3 independent persons.

PROTEST PROCESS

10.1 A driver may lodge a protest if they consider themselves aggrieved by any of the following:

a) The actions of a fellow driver in an incident occurring at the venue.
b) The technical specifications of a fellow driver's equipment.
c) Conduct of an official

10.2 All protests must be lodged no later than 60 minutes after the completion of the race.

10.3 A protest can only be submitted by the driver concerned. In the case of a Junior Driver, parent or guardian assistance is permitted.

10.4 All protests shall be in writing, signed by the driver and accompanied by the appropriate fee as per Appendix "D".
This fee shall be refunded in full if the protest is upheld; if the protest is lost the fee is forfeited to:

a) AIDKA
b) The owner of the equipment shall be compensated as determined by AIDKA

10.5 All protests and correspondence for the Protest Committee of the meeting shall be directed through the Driver's Representative, if appointed, otherwise the Chief Steward.

10.6 The Protest Committee will be a panel of 3 people nominated by AIDKA for Title events or the Stewards of the meeting for Club events. Any member of the Protest Committee who has a conflict of interest shall step down as a member for that hearing and a substitute nominated.

10.7 Race Meeting results cannot be finalised for any affected class while any protest is pending a decision by the Protest Committee.

APPEAL PROCESS

10.8 A driver may lodge an appeal if they consider themselves aggrieved by a decision or ruling.

10.9 All Appeals shall be in writing and presented on the correct form, accompanied by the appropriate fees as per Appendix "D" and handed to the AIDKA Secretary or Appointed AIDKA official (for an AIDKA Title Event) or otherwise the Chief Steward within 60 minutes of the decision or ruling being made. In the case of a Junior Driver / Junior Pit crew, parent or guardian assistance is permitted. The completed forms and fees will then be forwarded to the Secretary of AIDKA.

10.10 An Appeal can only be submitted by the individual concerned in the Appeal. In the case of a Junior Driver, parent or guardian assistance is permitted.

10.11 This appeal shall have the effect of suspending a sentence of suspension, disqualification or exclusion until the appeal is heard by the AIDKA appointed committee.

10.12 An AIDKA appointed Appeal Committee shall hear all Appeals.

10.13 On receiving an appeal, the Secretary of AIDKA shall initiate the appointment of an Appeal Committee. A meeting of the Appeal Committee shall be scheduled as soon as possible for the purpose of hearing the appeal.

10.14 All parties involved in the appeal shall be given notice of the date, time and place of the hearing and shall be allowed to provide witnesses or evidence as determined by the Appeal Committee without setting precedence.

10.15 After hearing evidence from the appellant, the respondent and their associated witnesses, the Appeal Committee will adjourn to make a decision. The Committee has the authority to either uphold or dismiss the appeal.

10.16 The decision of the Committee is to be conveyed to the appellant forthwith and entered in the appellants Logbook.

10.17 If the appeal is dismissed or reduced /increased as decided by the appeals committee, the penalty will commence forthwith.
If a driver has been suspended or excluded for any penalty other than Technical issues and the appeal is dismissed any points received from any class of racing during the meeting will be forfeited and they will be ineligible to receive any trophies, state plates etc.
Technical penalties will forfeit all points, trophies, and Title plates for that class only.

10.18 The decision of the Appeals/ Technical Committee shall be final.

10.19 If the appeal is upheld the appeal fee is to be refunded otherwise the fee shall be forfeited to AIDKA.

BEHAVIOUR

Rule #

11 Members who have been suspended for driving or technical breaches of the rules shall be permitted to participate whilst under suspension in other club activities, officiating or assisting other members in the pit area.

11.1 Members who have been expelled for breaches of alcohol and drug, verbal, physical, behavioural or intimidating an official or fellow competitor shall be excluded from attending any AIDKA affiliated club premises.

11.2 All penalties imposed for Rule 11, must have a specified period stating the start and completion date of penalty to be served.

11.3 No Driver, crew or participant shall verbally or physically abuse or intimidate an official or fellow competitor, crew, or participant. Any person acting in this manner will be guilty of an offence and shall surrender their Logbook and be liable to a penalty as per Rule 11.8.

11.4 Any AIDKA licence holder or affiliated Official at any sanctioned AIDKA event will conduct themselves in a professional sportsman like manner at all times. This is particularly important when in the presence of members of the public. Any person found guilty of this offence could be liable to a penalty as per rule 11.8.

11.5 Australian Independent Dirt Kart Association encourages good sportsmanship at all levels of competition. AIDKA Codes of Conduct must be adhered to by all members. Please refer to AIDKA code of conduct. Any person found guilty of this offence could be liable to a penalty as per rule 11.8.

11.6 If a Driver, crew or participant is excluded from an event, they have 30 minutes to pack up their belongings and depart the premises. A Drivers Representative or appointed Official must be present during this 30-minute period.

11.7 If any individual member is penalised under any AIDKA Behaviour Rules, they will be ineligible to hold, or apply, to be a member of the AIDKA Board, any AIDKA Sub Committee, be a club delegate or hold any official position at an AIDKA sanctioned event for a minimum of 12 months from the conclusion of the penalty.

After the initial penalty has been served (not the additional period) any individual member considering applying to be a member or reinstate their position of the AIDKA Board, any AIDKA Sub Committee, be a club delegate or hold any official position at an AIDKA sanctioned event within the additional period applied must apply to AIDKA Board for approval prior to nominating for such a position.

11.8 Penalty for any behaviour rule shall be:

- First offence suspended from any organised AIDKA race meeting or sanctioned event for:
  a) A minimum period of 3 months/ up to 6 months for physical abuse or,
  b) Up to 3 months for verbal abuse, unsportsmanlike behaviour or breaching AIDKA Code of Conduct.
- For any subsequent offence of any Behaviour rule, suspension from any organised AIDKA race meeting or sanctioned event for:
  a) 12 months for physical abuse; or,
  b) a minimum period of 3 months/ up to 12 months for verbal abuse, unsportsmanlike behaviour or breaching AIDKA Code of Conduct

11.9 AIDKA reserves the right to increase any behavioural penalty after reviewing historic behaviour penalties on AIDKA data base. This would be done on finding that the penalty was a subsequent offence under rule 11.8.

11.10 Senior Drivers will be responsible for the behaviour of their respective Pit Crews including crew members that have gained access to the pits with a Casual pit pass. Any violation will be charged directly to the Driver &/or crew.

11.11 Junior Drivers shall not be responsible for any adult involved with them. That adult will be responsible for their own behaviour.

CONSUMPTION OF ALCOHOL & OTHER DRUG RELATED SUBSTANCES

Rule #

12 ***For full AIDKA Alcohol and Drug Policy please refer to AIDKA website***

12.1 Alcohol Breathe Testing shall be administered at affiliated AIDKA sanctioned Events by an authorised person(s) as directed by AIDKA.

12.2 Alcohol Breathe Testing shall have a confirmatory test cut off level of 0.02mg/100m

12.3 All Officials, Drivers, associated Pit Crew or persons authorised to enter the Pit Area (Pit Area access restricted) shall be required to undertake Alcohol Breathe Testing when and where requested. Refusal by any of the aforementioned members to submit or cooperate fully with the Administration of Alcohol Breathe Testing, will be deemed to be the same as a positive test result (Rule 12.4)

12.4 **First** Offence: exclusion from the AIDKA affiliated Event where a positive test is recorded or refused (as per Rule 12.3) and suspended from attending any AIDKA affiliated Event or premises for a period of not less than 3 calendar months.

12.5 **Second** Offence: exclusion from the AIDKA affiliated Event where a positive test is recorded or refused (as per Rule 12.3) and suspended from attending any AIDKA affiliated Event or premises for a period of not less than 12 calendar months.

12.6 Any **subsequent** offence: exclusion from the AIDKA affiliated Event where a positive test is recorded or refused (as per Rule 12.3) and suspended from attending any AIDKA affiliated Event or premises for a period of not less than 5 calendar years.

SMOKING

Rule #

12.7 This rule applies to any person who is on the premises. Smoking **& Vaping are banned at or within 10 metres of the following areas at** any club's premises at all times during an event.

- In the Clubhouse
- Any enclosed building or on any structure at the venue.
- Any club owned, hired or borrowed vehicles, plant or equipment
- The pit area, race arena and red zones.
- Outdoor spectator grandstands or designated seating areas
- Outdoor food and drink outlets or dining areas
- Child designated areas, including playgrounds.

Any person found to be in breach of the above rule may be asked to leave the premises.

For full AIDKA Smoking Policy please refer to AIDKA website.

AIDKA

Australian Independent Dirt Kart Association

GENERAL COMPETITION REQUIREMENTS

General Competition Requirements
Rules of Racing
The Pits
Racing Format
Flags and/or Lights
QuickGrid formats
QuickGrid Points System

Rule #

13 When 80 or less total nominations are received, 3 or more nominations present on the day will constitute a class. If more than 80 nominations are received five or more nominations must be present on the day to constitute a class. If less than 5 nominations are received at any meeting, Licence grades classes (A & B) maybe combined. The organisers have the right to cancel or combine classes if necessary.

a) Where a class has enough nominations to constitute a class, any karts added from an unconstituted class will start at the rear of the field and shall not be eligible for points in that class.

b) Where there are not enough nominations to constitute a class, then the classes can be mixed, and points awarded to all karts.

13.1 A driver may only race one kart per class at a race unless the chassis is determined to be unrepairable by a scrutineer. The additional kart must be scrutineered as per AIDKA rules and the driver may start from their original starting positions. If a driver uses an additional kart for any other reason, they must start ROF.
.

13.2 Before racing shall commence on any race day a Drivers briefing should be held. At this briefing, comments from the Chief Steward, Starter and other relevant details shall be discussed. Driver's Representatives shall be appointed at this time. Probationary Drivers, Rookie and Midget Drivers should be addressed separately. Questions from Drivers should be invited.

13.3 All Drivers and pit crew must attend the Drivers' briefing.

13.4 a) Before racing/practice commences there shall be Event Medical or Alternative First Aid Unit in attendance. In the absence of Event Medical or First Aid Unit clubs may commence racing with a minimum of 2 accredited persons trained in Senior (provide) First Aid or higher (Advanced First Aid, Cert 4 Ambulance Officer, Paramedic, Equivalent Nursing Certification) in attendance who shall manage and reassure a patient (diagnosis is not authorised). A First Aid Kit will be provided by the Club. Clubs are encouraged to seek advice from respective State First Aid Services for assistance in providing adequate First Aid equipment and supplies for First Aid Kits.

b) Education / Practice days with 25 or less nominations have a minimum requirement of 1 accredited Senior (provide) First Aid person in attendance.

13.5 It is compulsory at AIDKA Title events to have an Ambulance, Event Medical or alternative First Aid Unit present before practice/racing commences. In the event that the Ambulance/Event Medical/First Aid Unit is called away for an emergency, or tending to a driver from an incident, racing may continue on the proviso that clubs have 2 currently accredited persons trained in Senior (provide) First Aid or higher and AIDKA approved minimum standard of First Aid equipment and First Aid room are available. These First Aiders may only provide First Aid and not perform any other duties at the meeting.

13.6 Clubs shall hold a copy of the "Current" Certification of persons carrying out First Aid at the track in the absence of Event Medical or State First Aid Service personnel.

13.7 Transportation of a seriously injured patient from the track in need of diagnosis and/or medical treatment should be by recognised Practitioner/Ambulance Service.

13.8 There shall always be at least 2 fire extinguishers available.

13.9 No Junior Driver or Senior Driver is allowed to practice or compete on the track at the same time

13.10 If a Driver moves up to a higher grade (e.g. KT to 125) then the Driver must compete at the rear of the field for the duration of 3 meetings until they have received 3 endorsements from the Chief Steward.
(Reference Appendix "A" for Title qualifications)

13.11 Driver must complete 3 heats in one class (to constitute a race meeting for purposes of signing off Logbooks) on the day. Logbooks to be handed to the Chief Steward at the Drivers briefing and returned signed at end of meeting. Only 1 CLASS signing per driver is to be endorsed at any race meeting.

13.12 Radio communication and telemetry aids (including mobile phones) with the exception of official timing equipment are not permitted to be used by Drivers during competition. Beacons are permitted to be used track side for the purpose of operating lap timers.

13.13 Transponders

The following rules apply to States and Clubs who are running transponders.

13.13.1 MYLAPS transponder system is the approved timing and scoring method of AIDKA. It will be used with MYLAPS software and karting compatible transponders.

13.13.2 Transponders will be the primary method of lap scoring. The overturning of race results can only be done through the appeals process. Only race day officials and other drivers in that race can be used as verifying witnesses in appealing transponder results. The results in any MyLaps apps are not final.

13.13.3 Clubs may elect to use a manual back up for lap scoring in conjunction with the use of MYLAPS system

13.13.4 MYLAPS transponder system shall be used at all AIDKA race events. Exemptions may be granted by AIDKA Executive on application from clubs for club events only. All titles will use Transponders.

13.13.5 Transponders are mandatory for all drivers excluding Midget, Rookie drivers and Single Event Licence drivers

13.13.6 Every driver for which transponders are mandatory must have a functioning MYLAPS Karting compatible transponder fitted to their kart for the purpose of timing/scoring during each race at an event. Drivers who fail to comply will not be permitted to enter the racetrack.

13.13.7 Where a transponder fails during a race, and the driver is notified, if they present to the grid again without rectifying the issue, they must not enter the racetrack.

13.13.8 Where a transponder fails during a race, and the kart has to be scored manually, the final position of that kart will not be guaranteed. The transponder is to be checked by an official before the in-grid pit gate is opened to other people.

a If the Transponder has recorded a lap in that race after leaving the out grid (form up lap or race lap) and the transponder is mounted to the kart, the driver will be included in race results, on the proviso that the timing system operator and/or the chief steward or any official approved by the chief steward can validate the final position of the driver. Where the final result cannot be determined by any of those officials, the driver will be awarded last place points

b If the Transponder has not recorded a lap after leaving the out grid (form up lap or race lap) and the transponder is mounted to kart, and is proven to be functioning on the in grid, the driver will be included in race results, , on the proviso that the timing system operator and/or the chief steward or any official approved by the chief steward can validate the final position of the driver. Where the final result cannot be determined by any of those officials, the driver will be awarded last place points

c If the Transponder is showing as not functioning on the in grid and/or no laps (form up lap or race lap) have been recorded and/or the transponder is not attached to the kart driver will be deemed a non-finisher for that race.

13.13.9 All drivers, or where appropriate, the guardian, will at all times be responsible for the correct fitting, operation and maintenance of their transponder in each race at an event.

13.13.10 If for any reason a driver has to change their transponder at any time during an event they must notify the Lap Scorers and/or Chief Steward the change of details before participating in any other races at that event. This must be done at least 1 full race before that driver is scheduled to race.

13.13.11 Should at any time during a race the transponder system fails the race will be stopped. The order of karts will be taken at the last point at which it was possible to determine the race position of all karts in that race. This will be final and not subject to protest or appeal.

13.13.12 Use of transponders does not negate the requirement for legible numbers

13.13.13 The MYLAPS transponder must be mounted:

a In direct sight of the ground.
b Must be inside of the front bar only
c Mounted vertically the correct way up
d Bottom of the transponder to be no more than 300mm from the ground

13.14 All motors shall be made available for inspection and engine measurement as requested by the Chief Steward or engine measurer.

13.15 Engines must be presented to the engine measuring area for measurement immediately after the event if requested by the Chief Steward or engine measurer.

13.16 It is the responsibility of the owner to rebuild their motor.

13.17 In the event of a race meeting being cancelled, if one full round has not been completed then all drivers shall have their nomination money refunded in full.

13.18 All Drivers and crews shall obey the instructions of an Official.

13.19 All Drivers shall report to the Stewards or Officials when requested to do so.

RULES OF RACING

Rule #

14 If a nominated Driver cannot make their dummy grid position, then the rest of the field will be adjusted by moving all Drivers up one grid position accordingly. If Drivers fail to take up their grid position once on the track, moving the row forward will close up the grid, unless a red flag complete restart occurs, drivers will move up grid positions.

14.1 No Driver shall push start their kart. There shall be at least 1 pusher preferably 2.

14.2 It is the Stewards discretion at which point a kart shall be removed from the track because of failure to start.

14.3 It is the Drivers responsibility to get their unit on and off the track as requested by the host Club and Officials of the day.

14.4 If a Driver is not in their rightful grid position while on the track, the Driver shall raise their hand to signal this to the Starter.

14.5 From the time karts are released from the grid until the start is given, Drivers are under Starters order. The start shall be a rolling start. At the end of formation lap(s) Drivers will approach start area at a consistent speed in 2 lines. No lights will be on during the approach stage. Karts must maintain formation. If starter is not happy with procedure, he/she will switch on yellow light indicating a further form-up lap.

14.6 The pole position holder governs the speed of a rolling start. This speed shall not be excessive as to make it difficult for the karts at the rear of the field to keep formation.

14.7 No karts shall accelerate until the start signal is given.

14.8 No karts shall break formation until the start signal is given unless they break formation and decelerate because of unforeseen circumstances.

14.9 To be classified a starter a Driver must face the starter and receive the green flag/light.

14.10 A restart will occur when:
a) 3 or more of the field stops in the first corner following the start of the race.
b) A kart rollover occurs in which case Rule 14.15 shall apply.

14.11 Any kart, which is to be overtaken, shall hold their line and not baulk the kart doing the overtaking.

14.12 A Driver who causes a kart to make contact with another kart or who drives or acts in a manner that could endanger them or any other persons may be penalised.

14.13 A Driver that is deemed to have deliberately displaced or spun out a fellow competitor shall receive: A penalty of exclusion of race meeting for first offence. Second offence in a 12 month period shall be 3 months suspension and any subsequent offence within a 12 month period shall be a 12 month suspension.

14.14 No kart shall be restarted during the running of a race once the race has been started. Clutch driven karts are exempt provided the driver has not left the seated position and assistance is not received to restart. No use of feet, hands or any part of the body is allowed. If the kart does not start immediately and move under its own power, it must be removed from the track as per all classes. Assistance of any kind to restart karts during a race is not allowed. Penalty loss of points for heat. Any driver that continues to attempt to restart their kart with field approaching for the next lap will lose all points for that heat and a further penalty shall be imposed, “recommend 5 points”.
Midget class can be restarted if it can be safely done.
Rookie class can only be restarted on the first lap unless there are less than 10 karts participating and if it can be safely done.

14.15 Any driver who as a result of a rollover or potentially serious injury shall not be able to compete in any restart of that race, nor shall they be able to compete in any other immediate class of racing, until they have been cleared by St John or State Ambulance Service or have been observed for a minimum of 30 minutes by First Aid personnel to not have any residual effects of rollover or injury. Any person refusing assessment by First Aid personnel will be excluded from further participation in the race meeting and will be required to provide AIDKA Secretary with a medical clearance from a recognised medical practitioner to confirm the person is fit to compete in motorsport. Any person, who as a result of a rollover or potentially serious injury (Red Flag/Race Stoppage), will not receive any points for that heat.

14.16 Any driver that is: a) taken to hospital; or b) suspected of a concussion type head injury by St Johns (or state) Ambulance Service or the race meeting nominated First Aiders in conjunction with the Chief Steward, will take no further part of that meeting, any other AIDKA race meetings or Education days until reviewed by a Medical Practitioner and a medical certificate produced to the AIDKA Secretary. (Entry to be made into Logbook). Medical certificate must contain the words **"fit to compete in motorsport**".

14.17 All restarts are to go back to the lap prior to the race stoppage. Only Drivers that are recorded as completing the lap prior will be eligible to restart provided, they have not been a kart which has rolled over or deemed to have caused the race stoppage.

14.18 Restarts after 1 lap will be Single Indian File.

14.19 Additional drivers involved in a race stoppage may be penalised at the discretion of the Chief Steward at all AIDKA Events.

14.20 The Chief Steward shall declare a race if there is only one (1) kart left racing in a race.

14.21 If 2/3rds of the race has been completed, the race will be declared. Race results will be the last completed lap. The kart(s) deemed the cause of a Race Stoppage will be recorded as a non-finisher.

14.22 If a kart comes to an unforeseen stop or loss of power in the path of other karts the Driver shall remain in the kart and raise their hand to indicate to the other Drivers the situation. Once safe to do so the Driver shall comply with Rule 14.3 of Rules of Racing.

14.23 If whilst racing, the Driver has to exit the course, they may re-enter the track at the nearest possible point, provided they do not gain an advantage and do so safely and do not impede any other Drivers.

14.24 Any driver not taking the track proper of the day maybe subject to a penalty. Once the race commences, any driver using the track cut through / roll through in full will be excluded from the race. Where possible the driver will receive the black flag during the race.

14.25 No person shall use the track as a thoroughfare or cross the track whilst a race is in progress, unless to assist with a potential safety issue.

14.26 A Driver shall not deliberately lift their front wheels with a pulling action on the steering wheel. This action is different to the bouncing of a kart.

14.27 To be classed a finisher the Driver must pass fully over the finish line, on the track proper, seated in the kart with the kart under its own power.

14.28 No Driver shall continue racing after the chequered flag is waved. All Drivers shall keep the kart circulating at a reasonable speed immediately after the chequered flag as not to impede other finishers.

14.29 At no time shall a Driver permit their kart to be pushed or driven in the opposite direction of the race being run.

14.30 Once a race has been completed and/or declared the race may not be re-run for any reason.

14.31 No Driver shall enter the in-grid at speed, such as to endanger other drivers, crews or officials.

14.31a **All drivers are to remain seated in or on their kart (i.e. in their seat, atop the back of their seat, or on one of their side pods or tyres) until all clear for that race has been given by the Ingrid Marshall.**
This rule to be compulsory for all title events and optional for club events and its implementation to be announced at driver's briefing prior to the commencement of racing.

14.32 Drivers that have the same offence recorded for a third time in their Logbook (excluding 14.13) in one race calendar year shall surrender their Licence/ Logbook to the Chief Steward who will make an endorsement of penalty and return Logbook to member. The driver shall be excluded from racing for the remainder of that weekend and attend a steward panel hearing (3 stewards) elected by the National Steward Co Ordinator within 5 days. A penalty of up to three months suspension from driving shall be imposed. The panel will advise the penalty applied. AIDKA Secretary to be advised of suspension. During suspension period drivers are permitted to attend AIDKA affiliated events and assist as an Official or enter pit area.

14.33 If a driver has been suspended or excluded for any penalty other than Technical issues any points received from any class of racing during the meeting will be forfeited and they will be ineligible to receive any trophies, state plates (if applicable) etc. Technical penalties will forfeit all points, trophies, and Title plates (if applicable) for that class only.

14.34 Any driver running in engines without due care may be penalised.

THE PITS

Rule #

15 a) The pit area commences at the start of Drivers briefing and concludes following the final event (or any other kart activity on the race track)
b) Drivers wishing to start their karts before this must have the Chief Stewards consent and must be done within the red zones.
c) For events where practice is offered before Drivers briefing, drivers may start their karts in the tracks red zones.
d) Title events will have pit open/close times outlined within the prospectus.

15.1 Only AIDKA licenced persons are permitted into the pit area. Under 5yrs of age and over 90yrs of age are permitted but will be uninsured.

15.2 All dogs, which are on the Club premises, shall be on a leash and are the responsibility of the owners. No dogs are allowed within the confines of the pit area

15.3 No Driver, participant, crew or official shall light fires, weld or use any open flame instruments within the confines of the pit area.

15.4 No kart shall be driven within the confines of the pit area.

15.5 No alcoholic beverages shall be consumed within the pit area.

15.6 Fully enclosed footwear must be worn within pit or racing area.

15.7 All karts must be pitted in the designated pit area in accordance with affiliated club licence.
No kart shall be started outside of the pit area or red zones.

RACING FORMATS

Rule #

16 The maximum contestants in any one heat will be 20 unless the AIDKA National Track Safety Officer has specified a lower track limit.

16.1 The maximum contestants in any final shall be 20, unless an AIDKA National Track Safety Officer has specified a lower track limit.
Where applicable the final will be eligible to only the top 20-point scorers of a class with starting positions being determined by highest points starting from the front. If one or more of the top 20-point scorers are unable to compete in the final the drivers in lower grid positions then move up grid positions therefore allowing drivers that were not previously in the top 20 (in the points position) to also move up, allowing the full capacity of 20 in the final.

16.2 Each Class of racing shall be contested over 4 heats with an optional final or 4 heats with a final only to decide the winner or Time Trials, Heats, Pre Final/B Main, A Main or 4, 6 or 8 heats with an option of dropping the worst heat or
All other formats must be submitted to AIDKA 14 days prior to the event and must not contravene safety.

16.3 A method of draw/reverse/middle/middle will determine grid positions for the 4 heats. (i.e., with 16 entries a possible draw is 1-16-9-8).

16.4 Late nominations (if accepted by club) to Rear of Field all day including all Finals at club discretion.

FLAGS AND/OR LIGHTS

Rule #		
17		**Green** – Race Start
17.1		**Crossed Green and Yellow** – Form up for Race Start
17.2		**Yellow -** hold position. Do not pass any karts until past the next Flag Marshall point not showing a yellow flag/light.
17.3		**Red** – In the event of a Red light/flag, the drivers shall raise their hand, reduce their speed safely to a slow pace and return to the finish line, where they will stop to one side of the track. If the accident is between themselves and the finish line then they must safely stop their kart and not pass the accident. A kart rollover will automatically bring about a red flag.
17.4		**Blue** – Driver being lapped, hold your race line.
17.5		**Black Flag-** Faulty equipment or has broken rules of racing must leave track with caution. Board with number can be shown.
17.6	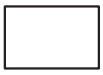	**White** – One lap remaining.
17.7	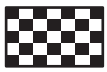	**Black and White Chequered** – Race finished. All karts passing this must stop racing and slow down with caution
17.8		**Red and White Chequered –** All karts are to return to the pits and await further instructions.

Rule #

18 Grid Draw Points - Definition

"Grid Draw" points are calculated from the "Official Grid Draw" as per the following example. In a class of 12 drivers a driver has grid draws 1, 12, 6 and 7 for Heats 1 to 4. The "Grid Draw" points are calculated as follows (using the 23-point system).
(Grid 1 = 23 points) + (Grid 12 = 9 points) + (Grid 6 = 15 points) + (Grid 7 = 14 points) = 61 points

18.1 *4 Heats and Final (Optional) Accumulated points or 4 Heats (with a Final only to decide the Winner) Final Grid Calculation*

The Final Grid positions are calculated as follows:
Highest point scorer over the 4 heats obtains lowest numbered final grid position.
If two or more drivers have equal points, then…

- The driver with the lower "Grid Draw" points for the 4 heats is allocated the lower numbered final grid position.
  If the drivers have equal "Grid Draw" points for the 4 heats, then…
- The driver with the higher numbered first heat grid position (which is also the driver nearer the bottom of the result sheet) is allocated the lower numbered final grid position.

Note: In the case of oversubscribed classes the driver nearer the bottom of the result sheet list is allocated the lower numbered final grid position.

Meeting Position – 4 Heats and Final (Optional) - Accumulated points

The Meeting positions are calculated as follows:
Highest point scorer over the 4 heats and the final, is awarded the lowest numbered meeting position.
If two or more drivers have equal points, then…

- The driver with the lower numbered finishing position in the final is allocated the lower numbered meeting position.

If two or more drivers have the same finishing position in the final, OR the final is not run (e.g. finishing position or drivers with a DNF), then…

- The driver with the lower numbered final grid position is allocated the lower numbered meeting position.

Meeting Position – 4 Heats with Final only to decide the Winner

- The order in which the competitors cross the finish line in the final, subject to penalties, protests and appeals determines the meeting position for each competitor.
- If a final is declared, refer to rule 14.21
- If the final is not contested, refer to "Meeting Position – 4 Heats and a Final (Optional) to determine the meeting position for each competitor.

18.2 *Meeting Position 4, 6 or 8 Heats with Option to Drop the Worst Heat*

The Meeting positions are calculated as follows:

- Highest point scorer over the 4, 6 or 8 heats (worst heat dropped if the option is selected) is awarded the lowest numbered meeting position.

If two or more drivers have equal points, then…

- The driver with the lower number of "Grid Draw Points" for the 4, 6 or 8 heats is awarded the lower numbered meeting position.

If the drivers have equal "Grid Draw Points" for the 4, 6 or 8 heats, then…

- The driver with the higher numbered first heat grid position (which is also the driver nearer the bottom of the result sheet) is allocated the lower numbered meeting position.

Note: In the case of oversubscribed classes the driver nearer the bottom of the result sheet list is allocated the lower numbered final grid position.

18.3 *3 Heats, Heat 4 Highest Points to the Front, Rear or Not Used & Final (Optional)*

3 Heats, Heat 4 and Final
Heats 1, 2 and 3 Grid positions are based on the initial grid draw.

3 Heat Rank
The 3 Heat Rank values are calculated as follows:
Highest point scorer after the 3 heats obtains the lowest numbered "3 Heat Rank" value.
If two or more drivers have equal points, then…

- The driver with the lower "3 Heat Grid Draw Points" is allocated the lower numbered "3 Heat Rank" value.

If the drivers have equal "3 Heat Grid Draw Points", then…

- The driver with the higher numbered "Grid Draw" value (which is also the driver nearer the bottom of the result sheet) is allocated the lower numbered "3 Heat Rank" value.

Heat 4 Grid (highest points to the front) are calculated as follows:

- The driver with the lowest "3 Heat Rank" value obtains the lowest numbered Heat 4 grid position.

Heat 4 Grid (highest points to the rear) are calculated as follows:

- The driver with the highest "3 Heat Rank" value obtains the lowest numbered Heat 4 grid position.

Note: For oversubscribed classes the drivers are allocated grid positions based on their "3 Heat Rank" and assigned to groups randomly. Example: If there are 36 drivers then there will be 2 groups. The drivers with "3 Heat Rank" values 1 and 2 will be both allocated grid position 1 and assigned to Heat 4 group 1 or 2 randomly.

Final Grid
The Final Grid positions are calculated as follows:

- Highest point scorer after the heats obtains the lowest numbered final grid position.

If two or more drivers have equal points, then…

- The driver with the lower "3 Heat Rank" value obtains the lower numbered final grid position.

Meeting Position – Accumulated Points
The Meeting positions are calculated as follows:
Highest point scorer over the heats and the final, is awarded the lowest numbered meeting position.
If two or more drivers have equal points, then…

- The driver with the lower numbered finishing position in the final is allocated the lower numbered meeting position.

If two or more drivers have the same finishing position in the final, OR the final is not run (e.g. finishing position or drivers with a DNF), then…

- The driver with the lower numbered final grid position is allocated the lower numbered meeting position.

Meeting Position –Final only to decide the Winner

- The order in which the competitors cross the finish line in the final, subject to penalties, protests and appeals determines the meeting position for each competitor.
- If a final is declared, refer to rule 14.21
- If the final is not contested, refer to "Meeting Position – Accumulated Points" to determine the meeting position for each competitor.

18.4 Time Trials, Heats, Pre Final/B Main, A Main

Time Trial

- The draw for the time trial shall be done with quick grid, to determine the starting order and division in split fields.

- The time trial shall be over a number of laps or set time. If a driver fails to record a timed lap, they will be given the opportunity to complete two laps (one warm up lap and one timed lap) at the completion of all time trials. The driver will start no higher than 50% of the field (ie in a field of 20 can start no higher than 10th) If they fail to record a time in the second session, then they will take last place in the field
- In the event of a tie in qualifying, the second fastest lap will determine the grid position. In the event of a further tie, then the next fastest lap will determine the grid and so on until the tie is broken.
- Points will be awarded based on heat points
- Drivers may be given point penalties for driving infringements or actions that impede the times of other drivers

Heats

- Time trials will determine the starting grid for the heats.
- Heats may be
  - Fastest to the front
  - Fastest to the rear
  - Highest points to the front
  - Clubs may choose other formulas for heat starting positions or the number of heats
- In the event of a tie after the heats, then the fastest time trial shall determine the highest starting position for the finals.

Pre Final / Dash (if used)

- The starting position will be determined from the points from both the heats and the time trials.
- The number of karts starting this event is optional.
- The finishing position of pre-final shall determine the starting position of the A Main.

B Main

- The starting positions for the B Main shall be determined from the points from both the heats and final.
- The B Main format may be

Class 0-24	No B Main
Class of 25-36	Positions 1-12 into the A Main Positions 13 – 32 into the B Main The top 8 from the B Main go into the A Main with the winner taking position 13 and so on.
Class of 37 or more	Positions 1-12 into the A Main Positions 13,15, 17…. To 51 will go into B Main 1, The top 4 will go into the A Main and take up positions 13, 15, 17, 19 Positions 14, 16, 18…. To 52 will go into B Main 2, The top 4 will go into the A Main and take up positions 14, 16, 18, 20

A Main

- The winner of the A Main will overall winner of the event

POINTS SYSTEM

New #

19 The overall result for the Class raced will be determined by either:
a) The aggregate points from all heats plus the final (if run).
b) 6 or 8 heats dropping the worst heat.
c) Results from the final race, as elected by the Club, to be notified at Drivers briefing.
When using Final Only Counts system. 23-point system used to determine the starting position in the final. The finishing order in the final determines the overall results.

19.1 "23" point system

1st = 23 points,	6th = 15 points,	11th = 10 points,	16th = 5 points,
2nd = 21 points,	7th = 14 points,	12th = 9 points,	17th = 4 points,
3rd = 19 points,	8th = 13 points,	13th = 8 points,	18th = 3 points,
4th = 17 points,	9th = 12 points,	14th = 7 points,	19th = 2 points,
5th = 16 points,	10th = 11 points,	15th = 6 points,	20th = 1 point,

19.2 Heat & final placings can be determined by either using the point penalty system where the other positions don't alter, or the club has the option to penalise driver's positions and move other places up. The points for those places that are not affected will remain the same. EG: 1st place is penalised 2 places, they are moved back to 3rd and 3rd and 2nd are moved up to 1st and 2nd. All other places will be determined as per point allocations.

19.3 Count back: Refer Rules 18.1 – 18.4

AIDKA

Australian Independent Dirt Kart Association

TECHNICAL REQUIREMENTS

Protective Clothing
Weights
Kart Formula
Number Plates & Numbers
Fuel
Fuel Testing Procedures
Illegal Equipment/Fuel/Motors
Cylinder Head Volume Measurement

PROTECTIVE CLOTHING

Rule #

20 Helmets

a) Must be in sound condition, fitted and worn as per the manufacturer's instructions

b) Must have a date of manufacture, maximum age less than 10 years from this date

c) Must be Full Face, and bear a label indicating they comply with one of the following standards:

(i) AS/NZS 1698
(ii) ECE22.05, ECE 22.06
(iii) Snell SA2015, SA2020, M2015, K2015, K2020
(iv) Snell-FIA CMR2007, CMS2007, CMR2016, CMS2016
(v) SFI 24.1, 31.1, 31.1A, 32.2A
(vi) FIA-8860, FIA-8859, FIA 8860-2018, FIA 8860-2018-ABP, FIA 8859-2015

For helmets that comply with UN ECE 22.05, the helmet must bear a label displaying an international approval mark. The mark is in a form of a circle surrounding the letter 'E', followed by the distinguishing number of the country in which the testing and certification was approved.

E1 E4

The mark must also have information concerning the actual standard with which it applies (i.e. 05 is the ECE 22.05 standard and is followed by the approval number issued in the respective country), the type of helmet (i.e. P is 'protective' and J signifies 'Jet' style open face approval) and its production serial number.

d) Must be fitted with either a shatterproof visor as supplied by the manufacturer or googles. Tear-offs, Roll-ons or similar must be used to maintain good vision, and must have a device to retain them to the helmet when used (i.e., rubber grommet or zip-tie) Visors must be closed whilst the kart is under power within the race arena.

e) No protruding objects are to be fixed or mounted on helmets except for manufacturers specified visors and peaks for each individual helmet.

f) Must be scrutineered, with an AIDKA approval decal applied, and details recorded into the user's logbook before used

20.1 Apparel

a) Suit
All Drivers must wear abrasive resistant zip type overalls which are adequately secured at the neck, wrist and ankles (to the satisfaction of the Scrutineer). This is the minimum acceptable attire of racing. Disposable type overalls or overalls with POP type buttons are not acceptable.

b) Gloves
All drivers must wear fully enclosed gloves. Only thumb and for-finger tip from the first knuckle can be removed.

c) Boots
All drivers must wear securely fastened and enclosed footwear.

d) Neck Brace
Neck braces or 360 Devices are compulsory for all classes of racing and must be worn as per manufacturers' recommendations. If neck brace comes off or is loose during a race, then driver shall be black flagged for faulty safety equipment and no points will be given.

e) All drivers with long hair must have it securely concealed inside either the helmet or clothing.

f) Rib vest must be designed specifically for kart use and may not exceed 2kg.

WEIGHTS

Rule #

21 Clubs shall be responsible for the purchase, maintenance, repairs and calibration of their AIDKA approved scales. The scales are to be set out on a level concrete pad and the base of the scales is to be bolted to the pad. The scale platform is to be to AIDKA standard specifications. Karts are to be weighed in one direction, which is to be clearly indicated on the scales. Driver must stand as close as practical to the centre of the kart to weigh total combined weight. Clubs need to add two strips of material cross wise on scales to position rear wheels this will prevent rear wheels from rolling when driver is standing in kart.

21.1 Minimum weights for Driver combined with Kart are set out in the Table below:

Class	Combined Weight
Midgets/Rookies	No combined weight
J Junior Light	95kg
J Junior Heavy	115kg
KT Light	120kg
KT Medium	140kg
KT Heavy	160kg
KT Twin	160kg
Statesman	140kg
125cc Light	140kg
125cc Medium	160kg
125cc Heavy	180kg
100cc Open	140kg
200cc Open	160kg
Outlaw	**175kg**

21.2 It is the driver's responsibility to ensure the combined kart and driver weight is above minimum weight specified in Rule 21.1 for the nominated class. Scales shall be available for drivers to use at all times. Officials may check kart weights or kart and driver combined weight at any time during the race meeting.

21.3 Competitors must weigh to the scales of the day. Should a Competitor fail their first (1st) weigh test they may request one additional test. This reading shall not be questioned and will be considered correct. No further correspondence shall be entered into. Karts and Drivers may be weighed at any time.

21.4 A person who contravenes Rule 21.1 (Table) will be guilty of an offence and be liable to penalty. The offence shall be Appendix "B" Penalty C (loss of points for heat).

21.5 Maximum kart weight can only be determined before the start of the race as the kart is presented on the out grid. An official, weigh Marshall or Driver can request that mud be scraped from a kart before or after weighing if they think it will have an effect on the weight of the kart or combined weight. The driver only with the use of a scraper has up to 2 minutes with the presence of an official to remove any excess dirt. If the kart fails to comply the driver will be excluded from the race.

Junior Classes
A J Junior driver may race in 1 weight class only on the day.
Maximum kart weight for J Junior Heavy when a Light Class is offered shall be 70kg or a combined weight of 105kgs when a light class is not offered.

KT Classes
Maximum Kart weight for KT Medium and KT Heavy classes when a Light class is offered shall be 75kg

125cc Classes
Maximum Kart weight for 125cc Medium and 125cc Heavy when a Light Class is offered shall be 85kg. If numbers do not allow for 3 split classes, then clubs may elect to run

125cc Light and Combined class at 160kg or Combine all classes at 150kg. No maximum kart weight when all classes are combined.

21.6 Weights must be attached to the frame or seat only. Weights less than 3kg must be fastened with a minimum 8mm high tensile bolt and locknut. Weights above 3kg must be fastened with a minimum of one additional 8mm high tensile bolt and locknut per 5kgs or part thereof. All weights must have 30mm washer placed against both the bolt head and the securing nut.

21.7 No additional weight is to be carried on person. Penalty to be imposed, immediate loss of licence for up to 3 months.

KART FORMULA

Rule #

CHASSIS

22 Wheelbase: shall be a maximum 1270mm and a minimum of 1000mm except juniors may have a minimum of 890mm. The maximum overall length of the vehicle shall be 1820mm without nose cone fitted.

a) Track: Maximum width for a kart shall not exceed 1400mm

b) Height: Maximum height for a kart shall not exceed 710mm from the ground

c) Wheels and Tyres: Four wheels only with 5” or 6” rim diameter, tyres must be treaded. No chemical tyre traction treatments are allowed to be used.

d) Axle: Rear wheels to be driven by a one-piece axle shaft only. Axle must not protrude beyond the tyre.
Hollow aluminium axles to be a minimum of 39.0mm x 2.75mm wall thickness. Hollow steel axles to be a minimum of 2.75mm for 39.0mm or less and 2.0mm for 39.1mm and above. As from 2014, only holes for the purpose of mounting keyways are allowable.

e) Frame: All go-kart frames to be in sound condition. Chassis to be constructed of metal and be manufactured from a minimum of 1.6mm Chrome Moly or 2.0mm low carbon steel tube.

f) Bumpers: must be fitted and made of tubular steel (front pegs exempt). Front to be a minimum of 15.0mm and maximum 20.0mm with a wall thickness of 1.6mm minimum and 2.4mm maximum.
Front bumper maximum height to be 200mm measured from the bottom of the lower bumper to the top of the upper bumper.
Rear to be a minimum18.0mm and maximum of 30.0mm with a wall thickness of 1.6mm minimum and 2.4mm maximum. The rear bumper must not exceed outside the width of the main chassis rails and maximum height to be 250mm measured from the bottom of the main chassis rails to the top of the bumper.
A chain guard Tag 30 x 20 x 4mm will be accepted.

g) Bodywork: The only permissible bodywork or aerodynamic aids are side pods, Nassau panel and nosecones must be made from shatterproof / non-metallic material. Fibreglass Nassau panel/wings must be chopped strand matting type. If plastic, it must be non-splintering

h) Chassis adjustments while driving are forbidden.

BODYWORK

22.1 Side pods are compulsory for all classes.

a) The side pod shall consist of two side members and a top and bottom section, as supplied by the manufacturer.

No additional materials or panels are to be fitted to the outside or top surface of the side pods, other than decals or competition timing equipment as directed. Modification for side mounted carburetted engines accepted. They are not to be used as fuel tanks or to support ballast.

b) Side pods must be a separate item to the under tray.

c) Side pod mounting bars must be welded or bolted at all fixing points and are to be attached at a minimum of two points to the chassis. Mounting bars are not to protrude past 75% of the inside of the pod and must have no open ends facing outward. Any open ends must be radiused. Tube diameter of side pod mounting bars to be a minimum of 18.0 mm and a maximum of 30.00mm, Steel bars to be a minimum thickness of 1.5 mm and 2.4mm maximum. Aluminium bars to be a minimum thickness of 2.0mm and 3.0mm maximum.

d) Bars on the outside surface of the side pods are not permissible.

e) Drilling of side pod components for lightness is not permitted.

f) Dimensions:
With the front wheels in a straight-ahead position, the leading edge of the pod must be inside the plane covering the outside of the rear of the front tyre and the outside of the front of the rear tyre. The rear tyre may not extend 25mm past the outside of the pod or more than 25mm inside the outside edge of the pod.
Ground clearance must be a minimum of 25mm and fill a maximum of 70% of the distance between the tyres, measured at centre line of the tyres. The front tyre must not make contact with the pod.

g) Nassau panel may be no wider than 500mm, no higher than 50mm above the steering wheel and must not restrict the driver.
Nose Cones: All classes are permitted to use nose cones.
Must be made from plastic only and must be non-splintering and non-shatter-able.
Nose cone must be able to be removed without the use of tools.
Nose Cones must be CIK stamped and approved.

BRAKES

22.2 Brakes must be foot operated through the two rear wheels. Disk brakes only. A Grade to have Hydraulic Disc brakes.

a) Brakes must be able to stop the kart. The rear wheels must not turn when the brakes are applied by hand.

b) No front brakes allowable.

c) Where only bolts retain brake pads, the bolts must be drilled, and a safety wire affixed or if split pins are used they are to be in manufactured condition with a minimum diameter of 3mm.

d) All brake cables must be multi-strand steel wire of 2.25mm minimum diameter and must be fastened by a machine swagged fitting or by positive methods that cannot cut into the wire. Brake pedal rods are to be a minimum of 6mm diameter solid steel if the threaded ends are cut into the rod or 5mm solid steel if the threaded ends are rolled on the end of the rod.

e) All Brake systems and pedal mounting bolts must be of high tensile material.

f) Drilling of brake components (excluding brake discs) for lightening is not permitted.

STEERING

22.3 Shall be affected by the operation of a full wheel.

a) The steering wheel boss is to be manufactured of metal. (No plastic).

b) The steering shaft is to be a minimum of 18mm diameter and have a minimum wall thickness of 1.5mm if tubular. The steering shaft shall have a collar device, to be securely fitted within 5mm of the lower edge of the upper steering shaft bush.

c) The tie rods are to be a minimum of 8mm steel rod or 12mm. outside diameter aluminium. An engaged thread length minimum 8mm is required between the tie rod and rose joint. Rose type joints of peg, plastic/nylon, and or pressed metal type are not permitted.

d) The drilling of any steering components for lightness is not permitted.

e) Tie rods are not to come into contact with steering shaft when at full lock left or right. Adjustable steering stops required on right and left sides of kart to prevent tie rods from making contact with steering shaft and locking up steering.
Midgets are exempt from Rule 22.3 e) as the karts are manufactured in a way that steering stops are not able to be used or aluminium angle used on the Tie Rod ends. A piece of (round) rubber is to be fitted (cable tied or glued) on the bottom of the steering shaft so there is no metal to metal contact with the steering shaft and tie rods.

f) Stub axle bolts to have no area of thread inside chassis or stub section.

UNDERTRAY

22.4 Shall be of non-perforated sheet of a minimum 1.2mm for steel and aluminium or 2.0mm for fibreglass. From a seated position the floor-tray shall have no void large enough to permit any part of the driver's body to pass through.

a) Must be fitted above the tags welded to the chassis at the front of the kart. The edge of the floor-tray within the sub area must not protrude below the bottom of the chassis. It must not extend beyond the inside of the chassis rails and cannot be drilled for lightness.

GUARDS

22.5 Chain Guards: All karts must be fitted with plastic or metallic chain guard that protects the driver/crew in the event of a chain breakage or prevent the driver/crew from trapping their fingers in the chain. It must be fixed at two points to cover chain and prevent the guard from being dislodged. KT Twin and 200 Open must have a chain guard on each drive chain.
Chain Guards that do not connect to the engine sprocket guard will have a maximum of 30mm gap between the chain guard and the engine sprocket guard on the motor. The engine sprocket guard must give sufficient front and side protection to prevent the driver trapping his/her fingers in the chain

a) Motors with flywheels on the outside of the kart must have a guard covering the flywheel.

FUEL TANK AND FITTINGS

22.6 The only permitted tanks are those purchased from a kart manufacturer designed for carrying fuel. Aluminium or metallic materials can be used with a minimum thickness of 1.6mm. No plastic/aluminium /stainless steel food or drink container of any type or design is permitted. The fuel tank shall be securely mounted to the floor tray or chassis positioned between the driver's legs and the floor tray. An overflow/ breather line must be fitted as to prevent spillage.
All fuel lines must be clamped or wired on.

SUSPENSION

22.7 Any suspension devise, either elastic or hinged is prohibited.

a) No jacking aids are permitted

22.8 ***EXOTIC COMPOUNDS***

a) Carbon Fibre Compounds may only be used in seats, Nassau panels and floor-trays and Outlaw Rear Wings

Exotic elements such as titanium are banned.

SEATS

22.9 All seats are to be in sound condition.

a) A metal plate 35mm minimum diameter of 1.5mm thickness shall be placed between the seat and the seat mount.

FASTENERS

22.10 All fasteners under the kart must be bolted upright. No bolt is to protrude in a dangerous manner.

EXHAUST

22.11

a) All engines not otherwise listed must have no less than three springs between the header and muffler and at least two springs holding the muffler to the chassis.

b) Rotax FR125 Max requires min 2 springs between header and muffler and may be bolted or attached with min two springs to the chassis.

c) IAME X30 with “Type 2” exhaust or PRD Galaxy require min 2 springs between the muffler and header and attached with min two springs holding the muffler to the chassis

d) All mufflers to be fixed with multi-strand wire (throttle cable) between the muffler and header.

e) The muffler must not protrude outside the rear wheel track.

THROTTLE

22.12 Throttles must be fitted with two return springs, (one at the pedal and carburettor) both able to shut the throttle if one should fail.

TRANSMISSION

22.13 All systems of varying the drive ratio in motion by torque manipulation are forbidden in all classes except gearbox classes.

a) Front wheel driver systems are forbidden.

b) Intermediate gear reduction systems, more commonly known as “jack shaft systems” are allowed provided the reduction drive system is a direct drive system fitted without a clutch assembly and the intermediate gear reduction system can be fitted either directly to the frame or between the engine and the mounting bracket.

NUMBER PLATES and NUMBERS

Rule #

23 Juniors/Rookies/ Midgets – White number(s) on green plate

23.1 KT Open – Black number(s) on yellow plate

23.2 100cc Open – White number(s) on black plate

23.3 Outlaw 250 – White number(s) on blue plate

23.4 200cc Open/125cc – Black number (s) on white plate

23.5 State or Territory Title Plates – White letter and number on red plate with the initial letter of the state/territory preceding the number.

a) Australian Title holder – Yellow number on Green plate

23.6 AIDKA owns the rights to numbers 1, 2 & 3 at any level.

23.7 AIDKA is to purchase one of 1, 2 & 3 plates for each contested class at any State, Territory or National Title.

23.8 Rear number plates shall be flexible material with a flat surface that is a minimum of 200mm square, the same colour as per Rule 23 – 23.5 for the class entered. The numbers must be a minimum of 145mm high and a minimum of 20mm thick and be plain font. The numbers must be a minimum of 10mm from the edge of the plate and a 10mm gap between double- or triple-digit numbers.

a) Nassau panel backgrounds are to be a minimum of 200mm high and 210mm wide. The numbers must be a minimum of 10mm from the edge of the plate or flexible material 145mm high and a minimum of 20mm thick and be plain font.

b) A letter must be on the state plates showing the state of origin & be a minimum of 145mm high preceding the number on Nassau panel & rear plate.
Side numbers on karts are compulsory. Numbers may be attached to the inner rear part of the side pod with a flexible plastic plate (no metal brackets permitted) or stuck to the outside of the pod.
Outlaws may have their side numbers on the outer edge of the wing and comply with all other rules from Rule 23 – 23.9 for their class.

c) Side number plates or flexible material must be a minimum of 160mm wide and 140mm high, numbers which must be a minimum of 100mm high and a minimum of 15mm thick and be plain font. The numbers must be a minimum of 10mm from the edge of the plate or flexible material and a 10mm gap between double- or triple-digit numbers

d) All numbers are to comply with the colours of the particular class being raced without highlight lines or borders.

e) Letters are not to be used on plates unless on a Red Title Plate or a National Plate that designates the State, Territory or Country in which the Plate was won.

f) Number plates shall be cleaned before entering the track to race.

g) Numbers and/or number backgrounds are not to be holographic, chrome, iridescent or translucent.

EXAMPLES OF NUMBER PLATE STYLES

REAR NUMBER PLATE

NASSA PANEL

SIDE PODS

STATE PLATES

APPROVED FONTS:

PLAIN

ITALIC

Impact
1234567890
Aachen or Aardvark Bold
1234567890
Compacta Bold
1234567890

FUEL & OIL

Rule #

24 The purpose of this General Rule is to ensure that the fuel used in Go-Kart Racing is consistent with Premium Unleaded Petrol as this term is generally understood.

24.1 Petrol within the meaning of these General Rules of Racing is one of the following:
a) Petrol and/or fuel of a kind recognized by the A.I.D.K.A. as being on general and genuine sale to the public of Australia.
b) Petrol and/or fuel that has been approved by A.I.D.K.A.

24.2 **The only oils, petrol and/or fuels permitted are:**
a) Premium Unleaded Petrol (PULP) 98 or 95 produced by major refineries, VP C9.
b) Fuels must not contain ethanol
c) Maximum RON 99
d) Only (1) one fuel type/brand of fuel may be used, no mixing of fuels is allowed.
e) Premium Unleaded Petrol (PULP) having properties and characteristics as required by Federal and/or State Government Regulations for Premium Unleaded Petrol (P.U.L.P.)
f**)** Fuel that has been approved by A.I.D.K.A. (which also will conform to Government Regulations)
g) The only oils permitted for use are:

- **Kastor Racing M (or Shell M)**
- **ELF HTX 909**
- **Maxima 927 Castor oil**
- **Putoline Castor R**
- **Penrite 10 Tenths Race castor oil**
- **Motul Kart Grand Prix 2T Oil**
- **Castrol A747**
- **Rock Oil Castor Kart**
- **Fuchs/Silcolene Pro KR2**
- **Ipone Stroke 2R**
- **Castrol TTS**
- **Penrite Hi-Per 2 stroke oil**
- **ELF HTX 976+**
- **Ravenol Racing castor 2T**
- **Redline Two Stroke Racing Oil**
- **Amsoil dominator racing synthetic**
- **Maxima K2 Fully synthetic Oil**
- **Motul 800**
- **Castrol R30/R40**
- **Rock synthesis 2 racing**
- **Vrooam 2T Kart Engine Oil**
- **Yamalube R**

h) The fuel, oil and ratio must be disclosed to the A.I.D.K.A fuel tester or officials if requested

24.3 **Safety:**
a) All participants in motor sport are reminded that fuel, oils, lubricants, and Coolants are highly specialised substances.
b) Participants must be aware that these agents may contain substances that are extremely dangerous to one's health if misused, inhaled or allowed to contact human skin.
c) Some of the contents of these fuels, oils, and lubricants are suspected of having the potential to cause cancer in rare instances.
d) The use of petrol as a general cleaning and washing agent is a common misuse of a potentially dangerous substance.

24.4 Any petrol that appears to have been formulated in order to subvert the purpose of this regulation will be deemed to be outside of the accepted regulation.

24.5 In addition, the fuel must contain no substance which is capable of exothermic reaction in the absence of external oxygen.

24.6 Only ambient air may be mixed with the fuel as an oxidant.

24.7 Any, one (1) commercially available motor oil that does not contain a performance enhancing additive may be used. If requested a competitor must advise the relevant officials which brand/type and ratio of oil is being used.

24.8 No substance other than oil as described in this General Rule may be added to petrol used in competition.

24.9 Fuel and oil must comply with AIDKA's rules and regulations

24.10 Fuel Testing & Sampling will be performed as per Rule 25 (Fuel Testing & Sampling.) AIDKA Technical Committee reserves the right to update and alter Rule 25 (Fuel Testing & Sampling.) when required.

24.11 Control Fuel: AIDKA may state the details and availability of a control fuel. These details must be on approved Supplementary Regulations for the event and will automatically constitute the designated fuel for that meeting. A control fuel cannot be a fuel, which is not an approved fuel.

24.12 Before a new fuel or oil is accepted as an approved fuel or oil, it must have all government approvals in writing. AIDKA may conduct an analysis before acceptance. A sample of fuel or an unopened bottle of oil must be submitted to AIDKA for analysis and approval. AIDKA reserves the right to charge all costs associated with the fuel and oil approval procedure back to the applicant.

FUEL TESTING PROCEDURES

Rule #

25 Fuel Testing & Sampling

a) AIDKA may perform in tank testing or take samples from a competitor's kart at any time during the event, from the completion of drivers briefing until the final results are official.

b) The driver or their nominated representative must be present to observe the process for the initial test. If a Driver or Representative cannot be present within 15 minutes, then an AIDKA official of the meeting shall be appointed as a proxy observer.

c) Refusal to allow a fuel test to be performed or disclose any required information will deem the competitor's fuel to be outside of **AIDKA's s**pecifications.

d) At the time of testing the following must be declared:
   i) Fuel Brand and type i.e. Caltex Vortex 98
   ii) Oil Brand and Type i.e. Shell Racing M
   iii) Fuel Oil Ratio i.e. 18:1
   iv) AIDKA may also request the following if further testing is required:
      1. Location and company fuel or oil was acquired
      2. Date of purchase
      3.

e) If a competitor's fuel is deemed to be outside of AIDKA's specifications the Chief Steward will be notified, and the drivers' logbook will be recorded with the infringement. The driver will be excluded from the event and results where the infringement occurred with an additional penalty to be determined by the AIDKA Technical Committee as per rule 26.4 within 5 days of notification first issued to the competitor.

f) The official instrument used for the testing of fuels by AIDKA is the Digatron FT-64, Anton Paar DM-35 Petrol density meter. The Digatron DT-15 instrument may be used at club events only. AIDKA reserves the right to use any recognised testing method.

g) AIDKA sample fuels will take priority over competitors' samples in all circumstances. If the required fuel volume cannot be obtained, AIDKA reserves the right to conduct testing with whatever volume has been successfully collected.

25.1 Testing at the event.

If a competitor fails a test, then the following will occur:

a) Two samples will be removed (minimum 250mL each) from the tank and placed into a plastic specimen container (HDPE). One sample will be used for a second test. Both samples shall be sealed in such a way to ensure the rupture of the seal upon opening the container. Each container should be labelled with the event, class, name and signature of the official and the name and signature of the competitor. The competitor has the right to request a third sample to be collected and sealed which they may then keep.

The testing instrument will be recalibrated using the cleaning and calibration procedures outlined in rule 25.4 for the Digatron and rule 25.5 for the Petrol Density Meter. Ensure the fluids used for calibration and the fuel sample are both below a temperature of 110 degrees F and within 10 degrees of each other for Digatron testing (temperature displayed on Digatron in bottom left corner). The second fuel sample will be tested according to the selected instrument's fuel testing procedure. If the second test reading falls outside of AIDKA's fuel specification range then the competitor will be penalised as outlined in rule 25 e).

Once the second test has be completed the sample used will be re-sealed and kept with other sample in case of an appeal being lodged.

b) The competitor has the option to appeal the decision from rule 25 e). In the case of appeal, the results from the meeting will be provisional, with any awards given to the competitor handed back to officials at the completion of presentations.

c) Both samples taken will be sent to the AIDKA appointed fuel tester for testing with the AIDKA Digatron and/or Density Meter. If the result obtained from the official ADIKA fuel tester is deemed to be outside of AIDKA's fuel specifications, then the sample will be sent to a third party laboratory for testing. The sample will be compared to a fresh sample of the fuel and oil mixture that the competitor has identified they were using. If any deviations from the known fuel oil samples occur the fuel will be deemed outside of AIDKA's specifications and the penalty applied will be upheld. The competitor will be responsible for advanced payment of appeals fees and all laboratory testing fees. The competitor will have 5 days from the time the Appeal is lodged to present evidence via the AIDKA Secretary.

25.2

If AIDKA takes a sample from a competitor at the event for testing post event, then the following will occur:

a) Two samples will be removed (minimum 250mL) from the tank and placed into a plastic specimen container (HDPE) and sealed. The seal shall be in such a way to ensure the rupture of the seal upon opening the container. Each container should be labelled with the event, class, name and signature of the official and the name and signature of the competitor. The competitor has the right to request a third sample to be collected and sealed, which they may then keep. AIDKA samples have priority of competitor samples.

b) The two samples will be sent to the AIDKA appointed fuel tester to perform fuel testing using the digatron FT-64 and/or the Anton Paar DM-35 Petrol density meter.

c) The testing instrument(s) will be recalibrated using the cleaning and calibration procedures outlined in rule 25.4 for the Digatron and rule 25.5 for the Petrol Density Meter. Ensure the fluids used for calibration and the fuel sample are both below a temperature of 110 degrees F and within 10 degrees of each other for Digatron testing (temperature displayed on Digatron in bottom left corner). One fuel sample will be tested according to the selected instrument's fuel testing procedure. If the test reading falls outside of AIDKA's fuel specification range, then the competitor will be penalised as outlined in rule 25 e).

d) If the Driver appeals this decision, then the second sample will be sent to a third-party laboratory for testing. The sample will be compared to a fresh sample of the fuel and oil mixture that the competitor has identified they were using. If any deviations from the known fuel oil samples occur the fuel will be deemed outside of AIDKA's specifications and the penalty applied will be upheld. The competitor will be responsible for advanced payment of appeals fees and all laboratory testing fees. The competitor will have 5 days from the time the Appeal is lodged to present evidence via the AIDKA Secretary.

e) AIDKA have the right to alter the official results pending post-race testing.

25.3 Fuel Testing

1. Prior to any test conducted, competitors must acknowledge which fuel they are using, and Testers must ensure the testing equipment is not contaminated from any test on other approved fuels by cleaning using the cleaning procedure outlined below. Refusal of allowing a fuel test to be taken will result in the fuel being deemed outside of AIDKA's specifications and the penalties outlined in 25 e) may be applied.

2. Fuel testing cannot be conducted on a metal bench or in a metal fuel tank or container. Fuel testing should be carried out on a wooden or plastic bench and if competitor's fuel is in a metal container it should be removed into a plastic specimen container before testing is conducted.

3. For details on controls of the instrument refer to the Digatron FT-64 Instruction manual, which can be accessed at:
http://www.digatronusa.com/adobe/instructions/Fuel%20Tester%20Inst.PDF
The manual for the Digatron DT-15 can be found at:
http://www.digatronusa.com/adobe/instructions/Dt15.PDF
The Manual for the Anton Paar DM-35 Petrol density meter
https://www.manualslib.com/manual/1404821/Anton-Paar-Dma-35.html

4. At race meeting where fuel testing is taking place competitors can request that their fuel be checked and tested before the race meeting commences. Any fuel tested before racing starts that reads outside of AIDKA specifications will not receive a penalty. However, if this fuel is then used during competition and tests outside AIDKA specifications the regular fuel testing process will be followed.

25.4 **Digatron Testing Procedure** (Digatron FT-64)

Cleaning Digatron probe

1. The metal portion of the Digatron probe must be cleaned before calibration of the instrument and at the end of a race meeting before storage of the probe.
2. To clean the metal part of the fuel testing probe, spray with a good quality brake cleaner. Do not spray the cords or Digatron digital interface with brake cleaner. Wipe dry with a clean cloth and allow to air dry for approximately 30 seconds. The probe is now ready for use.
3. The metal part of the Digatron probe must also be cleaned between use in each competitors fuel. This cleaning is conducted by dipping the probe in a clean sample of premium unleaded petrol and drying with a clean rag.

Calibration of the Digatron FT-64

1. Calibration of the Digatron must be conducted at the beginning of each race day and before a second test of a competitors fuel which tested outside of AIDKA's specifications.
2. Calibrate the Digatron in a sample of cyclohexane. To ensure you do not contaminate your cyclohexane sample, ensure the probe of the Digatron is clean and dry before calibration.
3. Follow the calibration instructions on page 9 of the Digatron FT-64 instruction manual. This will set the instrument to read at a value of -75.0 for dielectric constant and 0 for conductivity in cyclohexane.
4. The instrument is now ready to use for testing of competitors fuel.

Testing fuel samples

1. Turn on Digatron digital screen using the power on button.
2. Insert probe into fuel tank so that the fuel level is sitting in-between the two lines engraved on the side of the Digatron probe. Make sure the probe is not touching the outside or bottom of the container. See the diagram below.

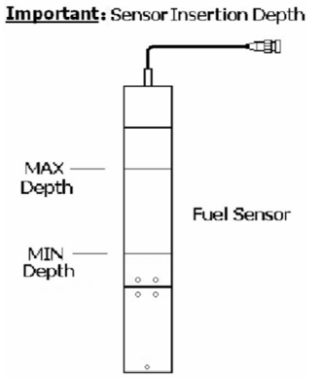

3. Wait for the reading to stabilise and view the dielectric constant value (top left corner value) on the Digatron screen.
4. At the start of each day a blank sample of PULP and VP-C9 will be tested and their dielectric constant values noted down.
   When the value stabilises, **make sure it is within -5 points and +30 points of the blank sample from that day.**
5. If initial sample fails, two samples will be removed (minimum 250mL each) from the tank and placed into a plastic specimen container (HDPE). One sample will be used for a second test. Both samples shall be sealed in such a way to ensure the rupture of the seal upon opening the container. Each container should be labelled with the event, class, name and signature of the official and the name and signature of the competitor. The competitor has the right to request a third sample to be collected and sealed which they may then keep.
   The Digatron instrument will be recalibrated using the cleaning and calibration procedures outlined in rule 25.4. Ensure the fluids used for calibration and the fuel sample are both below a temperature of 110 degrees F and within 10 degrees of each other (temperature displayed on Digatron in bottom left corner). The second fuel sample will be tested according to the Digatron fuel testing procedure.
6. If the second test is outside of AIDKA specifications, then the fuel will be deemed to be outside of AIDKA specifications and penalties will be applied by the Chief steward of the day as per rule 25 e).

25.5 **Fuel testing with the Digatron DT-15:**

1. Cleaning of the DT-15 is the same procedure as seen above for the FT-64.
2. The DT-15 probe shall be calibrated in cyclohexane. Insert the probe into a clean sample of cyclohexane and adjust the instrument to -75.
3. The probe may now be used to test fuel samples either in tank or from a separate sample taken.
4. The value displayed on the screen must be within the same parameters as described above for the FT-64.

Density Meter Testing Procedure (Anton Paar DM-35 Petrol density meter)

Setting up the density meter

1. Ensure density meter is clean.
2. Attach the long sample collection tube to the bottom of the density meter.
3. Turn the density meter on and make sure it is displaying the correct units of density (g/cm^3).
4. Using a blank sample of PULP depress the plunger of the density meter and then place tube into sample and release plunger to suck up the fuel. DO this a few times to ensure there are no bubbles in the sample cell (glass u-shaped tube which can be viewed through the side of the meter).
5. Record the value of the blank PULP sample for the day.
6. Repeat with a blank sample of VPC9 and record blank value.

Measuring competitor samples with the density meter

1. Make sure the density meter has been rinsed in a clean sample of PULP fuel.
2. Wipe the outside of the tube with a rag to make sure it is reasonably dry.
3. Depress the plunger and insert the collection tube into the tank of the kart.

4. Release the plunger to suck up sample. Keep density meter as vertical as possible.
5. Make sure there are no air bubbles in the sample collection tube. Wait for value to stabilise and **make sure it is within ±0.015 g/cm^3 of the blank sample from that day.**
6. Depress and release multiple times if needed to clear air bubble and stabilise reading.
7. If initial reading is outside of AIDKA specifications, drain a sample of the fuel into a sample collection bottle, clean density meter with clean PULP 98 fuel and then retest.
8. If the sample is still outside of specifications, two samples will be removed (minimum 250mL each) from the tank and placed into a plastic specimen container (HDPE). One sample will be used for further testing. Both samples shall be sealed in such a way to ensure the rupture of the seal upon opening the container. Each container should be labelled with the event, class, name and signature of the official and the name and signature of the competitor. The competitor has the right to request a third sample to be collected and sealed which they may then keep.
   Then take a new reading of the blank base fuel and ensure the temperature of the competitor sample is within ±3°C of the base sample. The density meter displays temperature on its interface when the sample has been sucked into the measurement tube.
9. If this test is outside of AIDKA specifications, then the fuel will be deemed to be outside of AIDKA specifications and penalties will be applied by the Chief steward of the day as per rule 25 e).

Cleaning the density meter after the race meeting

1. Suck up a clean solution of PULP in the density meter. Discard this solution and repeat with PULP at least 3 more times.
2. Next clean the density meter using the same process as above but with a clean solution of cyclohexane.
3. Finally repeat the cleaning procedure as above with a clean solution of ethanol.
4. Remove the sample collection tube and depress the plunger 2-3 times to try and remove as much remaining solvent from the density meter as possible.
5. Place density meter and sample tube back into its case for storage.

ILLEGAL EQUIPMENT/FUEL/MOTORS

Rule #

26 Check measuring/testing may be carried out during any AIDKA sanctioned event

26.1 In the event of a Protest being lodged as per Rule 10 (Protest Process), the suspect item/s will be presented to the Chief Steward who shall organise to have the item/s inspected.

ENGINE & COMPONENTS:

26.2 Should the protest be lodged against an engine, the Chief Steward on receipt of the protest, shall determine the measuring procedure, based on the type of inspection required.

a) If the engine is to be dismantled to a level that the owner cannot reassemble the engine to continue racing the remainder of the day, then the motor will be sealed with relevant parts marked or tagged, and the entire kart and engine kept in a designated area outside of their race events so that tampering cannot take place. An Official should have a visual of the kart during this time. The driver may choose to remove the protested engine/components and have it sealed/bagged, allowing them to continue racing with a second engine. At the completion of the meeting the inspection will then take place.

b) If the engine or required components can be inspected without effecting the competitors racing then the chief steward will arrange an inspection as soon as practical.

c) Should there be no suitable engine measurer at the meeting, then the engine shall be sealed, tagged and bagged and retained by the Driver. The engine will then be presented for inspection at a date (recommend 7 days) to be arranged by the AIDKA Technical Committee, should the motor not be presented for inspection, it will then be deemed illegal. Results of the meeting will be subject to the inspection.

d) Once the engine has been inspected, the measurer will present their findings to Chief Steward. On issuing their findings then the Chief Steward will advise the driver of the outcome of the protest.

e) Should the technical inspection fail, the engine shall be sealed, tagged and bagged and then kept in possession of the AIDKA appointed person. The driver has one hour to lodge an appeal. If no appeal is lodged, then the engine will be returned to the owner. If an appeal is lodged, then AIDKA will retain the engine. The appellant then has five days to present evidence to the AIDKA Technical committee via the AIDKA Secretary. The final decision as to the legality of the engine will then be made by the AIDKA Technical committee. If appealed, two (2) sets of measuring tools will be used to check the engine.

f) Costs and responsibility to reassemble the engine are those of the owner.

EQUIPMENT/FUEL:

26.3 Should the protest be lodged against an Equipment or Fuel, the Chief Steward on receipt of the protest, shall determine the measuring procedure, based on the type of inspection required.

a) FUEL: Upon receipt of the protest, the kart will be impounded until a sample can be tested as per Appendix “B”. If a fuel tester or equipment is not available, then a sample will be taken and sent to AIDKA for testing.

b) EQUIPMENT: Once directed the equipment will be inspected by an appointed official. If the official requires additional inspection/measuring equipment or time, then the equipment will either be impounded or sealed, to enable the official to complete the inspection.

26.4 Drivers of illegal motors, fuel or equipment will be suspended from driving at AIDKA affiliated Clubs for:

a) up to 6 calendar months for the first offence.

b) minimum of 3 calendar months, up to 12 calendar months for each subsequent offence.

Penalty to be decided by AIDKA Technical Committee.

CYLINDER HEAD VOLUME MEASUREMENT

Rule #

27 The measuring fluid will be a solution of 50% diesel and 50% auto transmission fluid. To be measured by use of 'B' Grade Burette maximum capacity 50cc (recommended 25cc), calibrated to a minimum 1/10th of a cc, under gravity feed.

Method

1) Remove spark plug and insert AIDKA CC Test Plug.
2) Place piston at approximately TDC.
3) The CC Test Plug to be withdrawn two (2) turns.
4) Insert the required volume of measuring fluid. Make sure the fluid is visible in the CC test plug.
5) Tighten CC test Plug down until it stops.
6) Slowly wind motor over and check for fluid level in CC Test Plug (as shown in diagram).
   Note: Motor to be measured should be allowed to cool to ambient temperature and no fluid shall be expelled through the top of CC Test Plug.
7) Should the first test fail, the competitor may request a second test. This test to repeat Items 1 to 6 above (after Step 8).
8) To clean out measuring fluid after failure of first test and before commencement of second test, unleaded petrol to be poured into cylinder, motor to be rinsed and blown out by inserting air hose into spark plug recess and turning piston to open exhaust, therefore, expelling excess fluid.
   Cylinder Head is not to be removed.
9) This applies to all 20mm plug length engines.
   Note: The CC Test Plug is available from your AIDKA National Technical Officer.

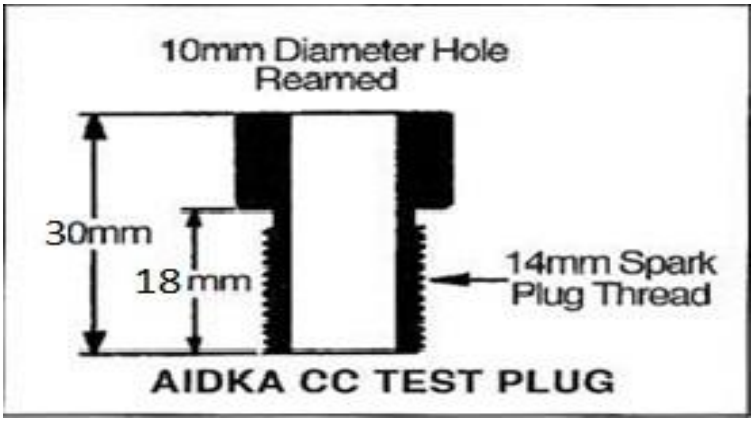

AIDKA

Australian Independent Dirt Kart Association

CLASS/ENGINE SPECIFICATIONS

Midgets
Rookies
J Junior
KT100S
IAME Parilla 125cc X30
IAME Parilla 125cc Leopard RL
Bombardier Rotax FR125cc Max
PRD Fireball 125cc
PRD Galaxy 125cc

Version 22nd September 2025

MIDGETS

Rule #

28 a) Engine: Honda GX35 or a clone Honda GX35 engine with the same specifications, both must be unmodified, and must be fitted with a kill switch located on the steering wheel. The use of the Honda GX35 clone engine has been granted temporary approval but will be reviewed in December 2025

b) Midget Exhaust spark arrestor material is a non-tech item.

c) Engines may be claimed at the completion of the meeting by AIDKA appointed Official for the purpose of engine measuring by an AIDKA approved engine measurer and will be returned once measuring is complete.

d) Wheelbase: 740mm – 880mm

e) Rear track width: Maximum 1100mm

f) Wheels: Metallic wheels to maximum dimensions of 185mm width, measured outside to outside, x 5" diameter.

g) Tyres: Any kart tyre to the maximum marked dimension of 11" x 6" -5". Tyres can be grooved.

h) Gearing:

Gearing (number of teeth)	Ratio
7-68	9.714:1
8-78	9.75:1
9-88	9.777:1

i) Body work: Compulsory nosecone, Nassau panel and side pods and rear bumper

j) Rear bumper: Must be of plastic construction. Rear wheels may protrude a maximum of 25mm per side beyond the plastic rear bumper. Rear bumper must not be wider than wheel track.

k) All Data collection communication and telemetry is prohibited.

ROOKIES

29 Single Yamaha KT100J Engine as per Rule 11.2 with an AIDKA Approved and issued Restrictor fitted between the header and motor which all exhaust gas must pass though. No modifications are allowed to the restrictor and no additional devices may be fitted in order to improve the flow of exhaust gases through the restrictor.
Option to run a rear bumper that covers the full kart width and made of plastic construction.

29.1 Restrictor Plates for Rookies must be approved and supplied by AIDKA and be suitably stamped for identification "AIDKA". The Restrictor Plate must be 13mm maximum (all gases must pass through plate) with no modifications and returned when no longer required.

J JUNIOR – LIGHT, HEAVY

Rule #

30 Single Yamaha KT 100J Engine as pe Rule 30.2

30.1 A 4-stroke engine less than 10 horsepower may be used by a Junior driver at an Education Day only. Clutches may be used.

30.2 **KT100J Specifications**

30.2.1 This section covers the KT100J series engine which conforms to the Yamaha specifications as approved by AIDKA. Any alterations / modifications are strictly prohibited except as specifically authorised within these rules.

30.2.2 **External Modifications:**
External modifications which do not in any way effect a performance gain are legal.

30.2.3 **Internal Additions:**
No additional material may be added except in the case of engine repairs and shall only restore store engine or components to original specifications excluding the cylinder. (The cylinder may be repaired except on the timed area and the cast areas of all ports).

a) The use of thermal barrier coatings/ceramic coatings on or in the engine/engine components and on or in exhaust components is prohibited.
b) The use of anti-friction coatings on or in the engine/engine components is prohibited.

30.2.4 **Legal Additions:**
Shall be limited to the following: Chain guard, motor mount, direct drive gear, carburettor return springs, extension of carburettor jet needles, \ third bearing and adaptor, temperature gauge, tachometer, air-cleaner and adaptor.

30.2.5 **Clutch:**

a) J class Rookies have the option to use a “STRIKE” clutch or Italsport Red Clutch, as an aid for driver education. No other brand is to be permitted. Clutches are “NOT to be Permitted” for competition in “All” other “J” classes, e.g.: J Junior (Light and Heavy)
This applies to all State, Territory and National Titles as well Club Competition Events.
b) All engines fitted with a clutch must have an ignition kill switch.
c) AIDKA may approve additional clutches for use in Rookies.

30.2.6 **Non-Tech Items:**
Are gaskets, seals, big end roller/cage, little end spacers, rings, washers, cages, fasteners, fulcrum spring (carburettor meter levering spring), spark plug and spark plug lead and cap gudgeon pins, main bearings, engine sprocket and key.

a) Unless specified, non-tech items are to be of the same type and style as the original. No alteration from the original manufacturer’s specifications is permitted to fit a non-tech item.
b) Head gasket/s must be retained.
c) Cylinder base gaskets are dimensionally free.
d) Carburettor base and phenolic spacer gaskets are dimensionally free.
e) Only crankcase half gasket may be formed from liquid gasket compounds.
f) Cylinder base adjusting shims/spacers may be of any material and must be of uniform thickens.
g) Spark plugs must have a maximum engagement length of 20mm (without the washer).

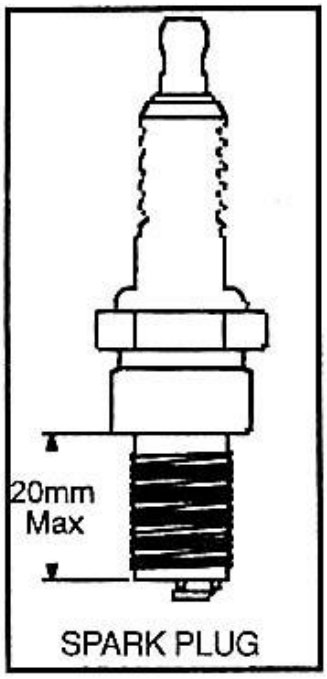

h) A direct drive sprocket (complete) cannot weigh more than 100 grams.
i) A direct drive sprocket retaining nut cannot be made from a hex material greater than 19mm AF.

30.2.7 j) Rookie clutch non-tech items are clutch sprockets, bearings, bushes, spacers and fasteners.

30.2.8 **Displacement:**
The maximum piston and stroke are: Piston-51.20mm Stroke-50.05mm.

Cylinder Ports:

a) All cylinder ports and passages must remain in as cast condition. No grinding is permitted at the junction of the cast iron liner and the aluminium passages. The only exception being the local grinding of the ejection pin protrusion in the inlet passage adjacent to the external cylinder face.
b) No chamfer on port edges is permitted.
c) Maximum diameter of inlet passage at the external cylinder face is 19.2mm.
d) Inlet tract length including gaskets from cylinder wall to carburettor gasket face is to be 53.00mm minimum to 56.00mm maximum including gaskets in front of and behind phenolic spacer.
e) Sandblasting, glass bead blasting, peening, acid etching, spark eroding and/or any other method of metal removal or displacement is not allowed.
f) Check the port height and width as per diagram.
g) All machined surfaces may be re-machined as long as engine is within any other specifications within the rules.
h) Distance from the top of the cylinder liner to the top of exhaust port shall be a minimum of 34.3mm Spacers/gaskets may be used to achieve correct cylinder length/dimension in accordance with this rule, but must be in addition to the existing gasket.

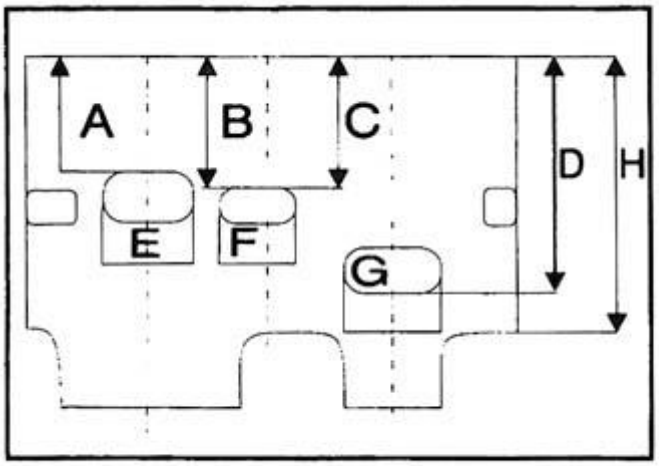

CODE	DIMENSION
A	34.30mm min
B	41.30mm min
C	40.30mm min
D	not applicable
E	29.60mm max
F	24.45mm max
G	30.60mm max
H	not applicable

30.2.9 Cylinder measuring procedure

30.2.10 **Engine Compliance**
Refer to Rule 27 for procedure

Cylinder Head:

I. Must be original Yamaha casting.
II. The welding and re-machining of the combustion area, gasket face and spark plug surface is allowable. Any additions/repairs must be permanent and non-adjustable.
III. The combustion chamber style is required to have a squish band and chamber which are visually concentric to the spark plug.
IV. The combustion chamber volume shall be a minimum of eleven 11cc. Refer to Rule 27 under Technical Requirements for procedure.
V. The combustion chamber/squish area shall not protrude beyond the gasket sealing face of the cylinder head.
VI. The spark plug thread may be repaired and shall retain its original position in relation to crankshaft axis.
VII. Maximum distance from sealing surface of spark plug to combustion chamber sealing face shall be 33.5mm.
30.2.11 VIII. Repairs to the spark plug sealing face must be by addition of weld material only and re-machining to a flat surface.

Piston:

a) Must be approved and stock appearing.
b) Legal pistons are Yamaha, KSI or Strike with cast piston crown or Strike Evolution 1 with machined piston crown. These pistons must be approved and stock. The chamfer on the skirt of the piston is to be not more than 0.9mm maximum. It is permissible to notch the piston to allow for earless circlips. The
30.2.12 piston skirt length may be machined, provided its length must equal distance on both sides.

Connecting Rod:
The connecting rod can be either of the following:

a) Yamaha (P/N 397-11651-00, P/N 50w11651-00, P/N 787-11651-01, P/N 7f6-11651-02.

or

b) KSI (The KSI replacement conrod will no longer be allowable from 2014)
30.2.13 No polishing or shot peening allowed.
Minimum/Maximum rod length centre to centre 99.87mm - 100.13mm.

Crankshaft:
Must be stock and have a minimum width across the top of the crank wheel of 48.8mm. Plugging of the counter balance recesses, shot peening, polishing is forbidden. Crank pin is to be the standard solid pin. It is permissible to recondition the crankshaft main shaft by plating. The minimum diameter of the crankshaft is 92.7mm. Repair of the drive

side crankshaft end, where the threaded section has broken off by drilling and tapping the centre of the crank to accept an M6 or M8 screw.

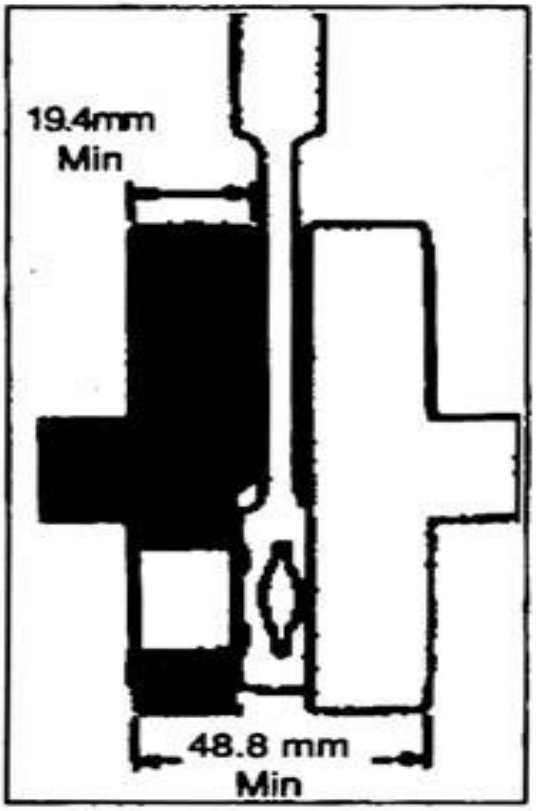

30.2.14 *Diagram is for dimensional uses only*

Crankcase:
The crankcase ports will remain as cast. The minimum chordal distance measured with a vernier calliper across the widest section of the transfer ports shall be 81.5mm minimum (as per diagram). Existing crankcases that are narrow may be spaced with a thicker gasket.

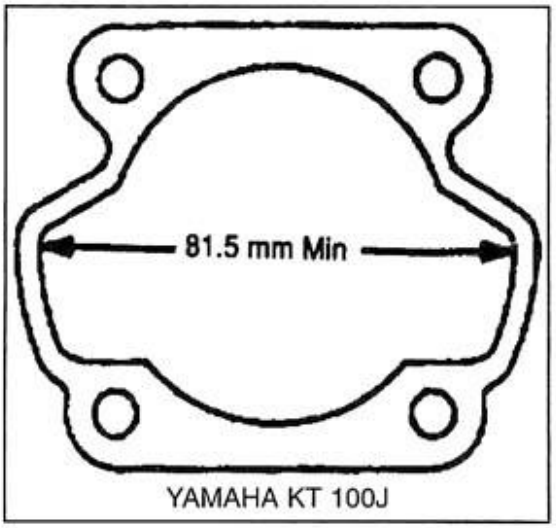

30.2.15

Ignition:

a) Must be external rotor type and OEM supply
b) Both C.D.I. and T.C.I. ignition units and stator coils as supplied by Yamaha are eligible
c) No modifications or internal repairs to the “black box/control module” or stator coils on the TCI and CDI ignition systems with the exception of the spark plug lead, which can be repaired externally only unit are eligible.
d) No C.D.I. unit shall vary more than one (1) degree between 5,000RPM and 10,000 rpm.
e) It is permissible to repair/replace the connector for both CDI and TCI modules and mating wire.
f) Maximum inside diameter measurement of the ignition rotor to be 62.00mm.

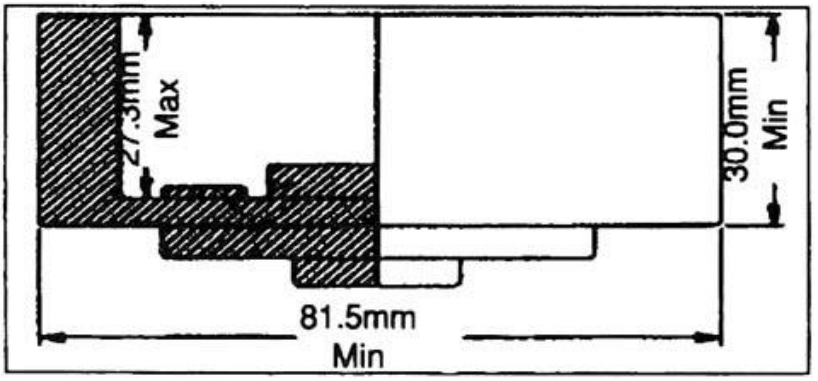

30.2.16 *DIAGRAM IS FOR DIMENSIONAL REFERENCE ONLY*

Carburettor:

Must be Walbro WB Series conforming to dimensions (as per diagram).
(Note: WB24 Model and WB 42 Models are not allowed).
Manufacturer - No additional holes or machining is permitted except:

a) It is permissible to machine the Walbro carburettor body to:
   i. Conform to dimension E
   ii. Conform to dimension C
   iii. Accept O-ring(s) for the low speed jet and throttle shaft.
b) A threaded butterfly screw must be retained; countersunk screws are not permitted. Butterfly and shaft must be as manufactured.
c) It is permissible to repair the inlet seat and throttle shaft bore in the Walbro carburettor.
d) It is permissible to enlarge only existing fuel/air holes, but they may not be deleted or relocated.
e) All air must pass through the carburettor venturi.
f) **Measurement Code:**
   i. As cast maximum Venturi diameter 24.13mm.
   ii. As cast (area will extend from the front of the carburettor to the progression discharge jet which must have all or portion of this jet in the cast area).
   iii. Maximum downstream diameter 25.7mm.
   iv. Butterfly shaft must be located at the bore centre.
   v. Minimum carburettor body length of 37.5mm.

30.2.17

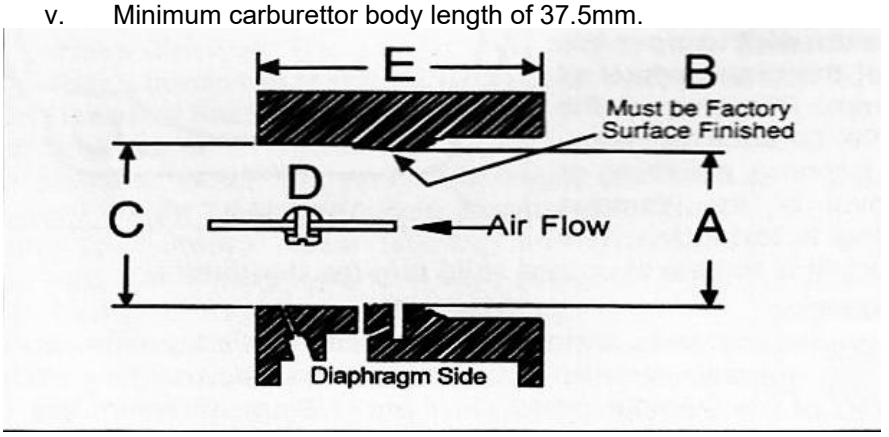

Pressured Fuel Systems

30.2.18 Additional fuel pump or pressurised systems are forbidden. Squeeze type pump between the fuel tank and carburettor is permitted.

Phenolic Spacer:

To remain as moulded by Yamaha factory and conform to the diagram below. Drilling of the phenolic spacer mounting holes is permitted. Sealing face may be re-faced.

30.2.19

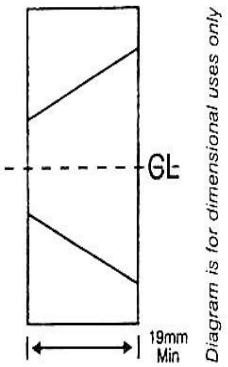

Exhaust Header Pipe

This item is not restricted to the original manufacturer but must completely conform to the type (style) of the original header pipe. Inside diameter must be parallel. Length 120mm minimum (per new measuring method).

Maximum inside diameter of 36mm. Minimum diameter 34mm (as per diagram).

Modifications to fit exhaust gas temperature gauge sensor is permissible. Exhaust gas area from piston to muffler, the gases must pass through, in the manner in which the original manufacture intended. No additional parts/paths allowed within, that may gain performance.

30.2.20

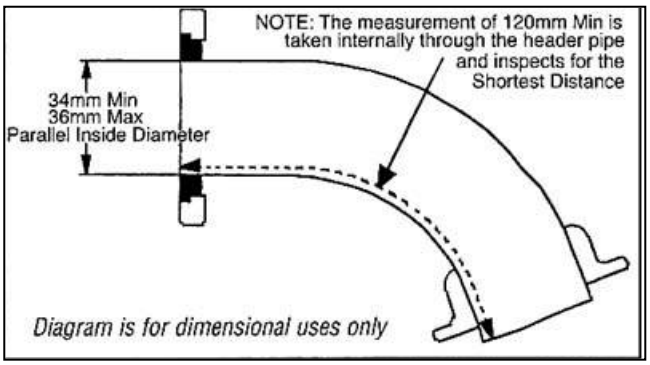

Exhaust Muffler

30.2.21 Muffler must be commercially manufactured for Karting. No internally individual modifications allowed. External repairs or damage that doesn't gain performance are allowed. In any dispute the technical committee's decision is final.

30.2.22 **Exhaust Header Studs:**

Must remain in their original position.

30.2.23 **Internal Parts:**

The internal parts must be finished as per Yamaha factory specifications.

Engine Measuring Procedure (Using Official AIDKA Gauges):

The AIDKA Gauges have been designed to make engine measuring quick and easy. If an engine fails when measuring with the gauges; the competitor may request that the engine be re-measured using Master Gauges held by the AIDKA National Technical Officer.

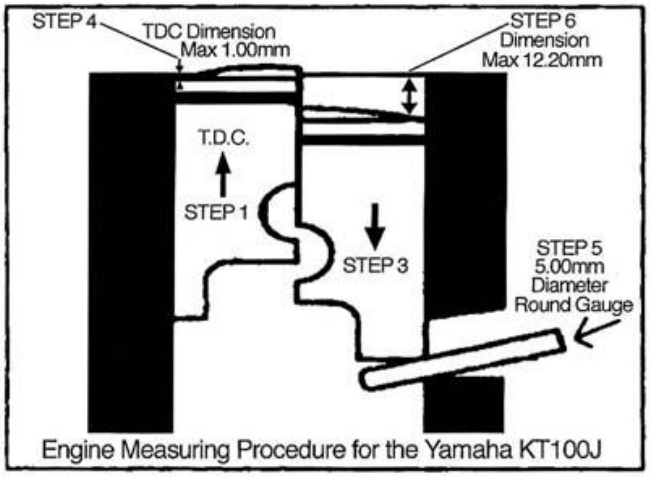

DIAGRAM IS FOR DIMENSIONAL USES ONLY

Procedure as follows:

Step (1) Remove the cylinder head.

Step (2) Remove head gasket. If more than one (1) head gasket is present remove only the top head gasket. The additional gaskets must remain for all further engine measuring compliance.

Step (3) Torque down the cylinder. (optional)

Step (4) Fit 1mm gauge and rotate engine to top dead centre. If piston fails to contact gauge, engine is deemed illegal.

Step (5) Insert 5mm diameter piston stop gauge in bottom of inlet port. Rotate engine until piston stop gauge contacts firmly.

Step (6) Insert 12.2 gauge into bore above gudgeon pin centre line against cylinder wall. Gauge must not contact top of barrel, plus any additional head gaskets fitted.

30.3.24 Step (7) Check exhaust port height with a 34.30 gauge. If gauge enters port the engine will be deemed illegal.

Engine Sealing Method – Refer to Appendix F

Rule #

KT 100S SPECIFICATIONS

31 Single KT 100S Piston Port Engine only as manufactured by Yamaha with standard external appearance (no left-hand conversions) from carburettor inlet to barrel exhaust outlet. Piston port engine must retain piston induction only (no reed or rotary induction allowed). External modifications, which do not in any way affect a performance gain, are legal. Maximum piston diameter is 55.00mm.

a) The use of thermal barrier coatings on or in the engine/engine components and on or in exhaust components is prohibited.

b) The use of anti-friction coatings on or in the engine/engine components is prohibited.

31.1 Legal Additions

Legal additions shall be limited to the following:
Air cleaner, chain guard, motor mount, direct drive gear, extension of carburettor jet needles, carburettor return springs, third bearing and adaptor, temperature gauge and tachometer, fin dampeners, fasteners, gaskets, joiners in spark plug leads, non-original spark leads, carburettor diaphragm cover breather pipes, air cleaner mount, non-original spark plug caps are allowable.

31.2 KT Ignition

The standard KT 100S (unmodified) ignition to be used, the fitting of the following modules as an alternative to the standard KT 100S ignition module is permissible:
Yamaha, Victa, Atom, Delta, Wei/Shieh, Sig, Nova, PRD, and TCI. permitted. Ignition key is a non-tech item. The rotor must be OEM with no modifications. The rotor outside diameter may be cleaned or lightly sanded but no additional machining is allowed.

31.3 Crankshaft

Crankshaft must be the original KT 100S with a maximum stroke of 46.20mm.

31.4 Connecting Rod

The connecting Rod must be original KT100S, KT100J. The KSI
Replacement rod will no longer be allowable.

31.5 Exhaust Header Pipe

a) This item is not restricted to the original Manufacturer but must comply to the type (style) of the original header pipe (as approved by AIDKA).

b) Inside diameter must appear parallel.

c) Outside length must be a minimum of 200mm.

d) Maximum inside diameter of 36mm. Refer to diagram.

e) Modifications to fit exhaust temperature gauge is permissible.

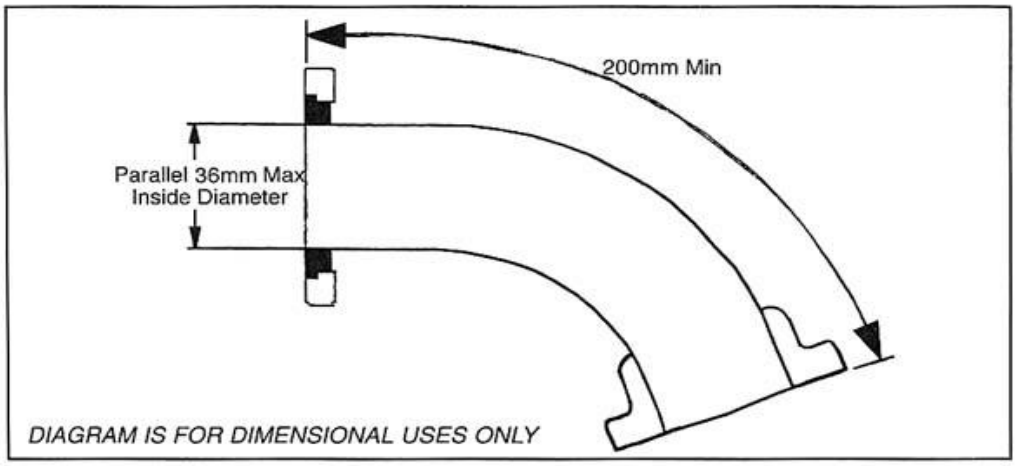

KT 100S exhaust header pipe *(Supplied by Yamaha Motor Company, April 1989)*

31.6 Clutch

A clutch is not permitted in this class.

31.7 Cylinder

The cylinder must be of original Yamaha KT 100S manufactured materials only unless otherwise specified.
The cylinder is not to have any additional / removable inserts/ passages / tubes or dividers of any type.
Porting is allowable but must be only to the existing ports in their original intended layout. No additional ports or plugging of any ports. Threaded inserts are permissible to repair existing threads; studs may be replaced with bolts in existing location.
Re-machining of all factory machined surfaces is permissible.

31.8 Carburettor

Walbro WB series carby. The WB 42 (choke model) is allowed with the choke functioning or plugging of the choke mechanism holes in their original position.
Machining of an “O” ring groove on the front face to act as a dirt seal is allowed.
Machining of both sides of the carby is allowed with a minimum dimension of 37.0 mm.

31.9 SEC Barrel Clarification

If you use a SEC barrel on a KTS, it must be machined to the same specs as the DK barrel for the fitting of the Exhaust Gasket and Head Gasket.

31.10 Inlet Track Length

Minimum inlet track length shall be 63mm measured from the outer carburettor adaptor face to the piston wall. Phenolic spacer and alloy adaptor must be retained. Gaskets may be added to achieve the minimum dimensions.

31.11 **Pistons** approved are Burris, Strike, H Piston (this piston has a graphite coating), Yamaha, KSI, KSI Mk11, JDP/Vertex, ARC (forged and cast).

31.12 **Engine Sealing Method** – Refer to Appendix F

IAME Parilla 125cc X30

Rule #

32 Preamble:

The following are the Technical Specifications for the PARILLA LEOPARD X30 125 engine, as approved by AIDKA. Unless otherwise specified, the engines must be original in all their components according to the PARILLA LEOPARD X30 125 drawings. Homologated drawings are available at www.aidka.com.au The engine must be Australian delivered and imported by an AIDKA authorised importer to be eligible for competition. Neither the engine or any of its ancillaries may be modified unless specifically authorised within these rules. Only Genuine IAME components that are specifically designed and supplied for the Parilla Leopard X30 125cc engine are legal, unless otherwise specified. Any removal, addition or polishing of material is strictly forbidden. Sandblasting, glass bead blasting, peening, acid etching, spark eroding and/or any other method of metal removal or displacement is not allowed. The use of thermal barrier coatings / ceramic coatings on or in the engine / engine components and on or in exhaust components is prohibited. The use of anti-friction coatings on or in the engine / engine components is prohibited. OEM pistons are exempt.

32.1 Alternate Components

Either one of the following carburettor/exhaust combinations are allowed.
Option A – Tryton HB27 Carburettor & Type 1 (Muffler & Header type) Exhaust
Option B – Tillotson HW-27A Carburettor & Type 2 (One piece style) Exhaust
Either Homologated Ignition System may be used with both options

32.2 Displacement

123.67cm3, BORE 54.00mm, STROKE 54.00mm, MAX BORE 54.28 mm

32.3 Cylinder

1. All ports must be of intended design conforming to drawings supplied by the manufacturer.
2. No modifications or grinding to the ports is allowed.
3. Cylinder length 86.6 +0.1 -0.2
4. Water connections to the cylinder are free but must retain the homologated position and threaded sizes.

32.4 Base Gaskets

1. The type of material is a non tech item
2. The minimum base gasket/gaskets must be a minimum of 0.30mm and a maximum of 0.45mm.
3. More than 1 base gasket can be used.

32.5 Cylinder Head

1. Aluminum Cylinder Head must be of original engine manufacturer and conform to drawings supplied by manufacturer.
2. No material to be added except for spark plug thread repair.
3. Distance from spark plug sealing face to combustion chamber ceiling face 29.3mm+/-0.25mm.
4. The combustion chamber volume shall be a minimum of 10.3cc, Refer Appendix F.
5. Water connections to the cylinder head are free but must retain the homologated position and threaded sizes.
6. Cylinder head profile must not vary from the original profile and will be checked with the IAME Cylinder Head. Profile Gauge (part number 8TT-025/1).

32.6 Squish Gap

1. The Cylinder Head Squish clearance shall be a minimum of 0.9mm as per the homologation paperwork.
2. Shall be measured using a 2mm solder wire (tin).
3. When inserted in the cylinder the engine shall be rotated until the solder is squeezed between the head and piston crown.
4. Process shall be conducted on both the right and left hand side of the engine.
5. Measurements shall be averaged out and must equal no less than 0.9mm.

32.7 Crankcase, Crankshaft and Con Rod

1. Must be of original engine manufacturer and conform to homologation drawings
2. It is permissible to hard chrome the crankshaft in the main bearing /seal area to restore the surface to original factory specification.

32.8 Piston

1. Piston must be of original manufacturer, supplied by IAME Spa with “IAME sud” marking on dome and conform to homologation drawings.
2. No modifications are permitted.

32.9 Gudgeon Pins

No special alloys allowed, must be of magnetic material and comply with the drawing as supplied by the manufacturer.

32.10 Clutch

1. Must be of original manufacturer and conform to manufacturers drawings with original IAME markings IAME X30125840 or IAME X30125841 on the clutch hub. No modifications permitted.
2. Both the X30125550 and X30125550A clutch drum may be used and are interchangeable with the clutch hubs listed above.

32.11 Reed Block and Reed Valves

1. The only reed pedals to be used are the genuine IAME Fibreglass (Vetronite) or Genuine IAME Carbon Fibre Reed Pedals, both with IAME markings.
2. Reed thickness 0.30mm +/- 0.08mm
3. Reed block must be the original IAME one as supplied by IAME.
4. It is permissible to alter the inlet conveyer to conform to the maximum dimension of 29.3mm as detailed in the homologation papers.

32.12 Carburettor

1. Either the Tryton HB27 or Tillotson HW-27A Carburettor may be used as per 32.1 options
2. No sleeving of the carburettor throttle bore is permitted.
3. Adjustment of carburettor jet needles must be done by manually turning the jet needle (or its extension) only. It is permissible to add a second soring on the jet needles to prevent rotation due to vibrations
4. It is permissible to mount the carburettor upside down.
5. Carburettor throttle cannot be actuated by electro-mechanical means.
6. It is permissible to fit a mechanical stop to limit the range of carburettor jet needle movement, however no modifications to the carburettor are permitted to mount such a stop.
7. The only permissible carburettor kits for use with the Tillotson HW27A are the DG-3HW or HL-DG1 Gasket & diaphragm Kit and the RK-6HW or RK-117HL Repair Kit. All spare parts must be genuine Tillotson
8. The carburettor kit, inlet needle & seat for the Tryton HB27 are a non-tech item.
9. The protrusion on the carburettor top plates may be removed to allow more secure fitment of the airbox/filter rubber.

32.13 Ignition

1. IAME SPA Selettra Digital-K Ignition System – Key type Ignition, or PVL 690/ Selettra Digital S Ignition may be used
2. The woodruff ignition rotor key must be retained and may not be modified.
3. Spark plug cap must incorporate a minimum of a 5kohm resister.
4. The only Selettra key type ignition module to be used is the green module marked with AKA20L.
5. The only IAME ignition module to be used is the blue module marked with AKA20L as per homologation
6. In the event of required repairs the plastic fittings registered and homologated as parts of the electrical systems are permitted to be replaced with non-supplied fittings.
7. All stator mounting hardware must be as per OEM.

32.14 Exhausts

1. The only permissible exhaust allowed is as supplied from IAME SPA, Type 1 & 2, they must carry the IAME identification and conform to the drawings in the homologation papers

2. The mixing of Type 1 & Type 2 exhaust system components is prohibited.
3. An O2 probe/fitting is allowed to be fitted to the muffler as per the homologation document.
4. The X30 type 2 exhaust system may have only one gasket or a maximum of one additional genuine (and unmodified) IAME spacer fitted with one gasket either side of the spacer, being of the same type and style as the original.

32.15 Header Pipe

1. The only permissible header pipe for use with the type 1 exhaust system is the one as supplied by IAME SPA and must carry the IAME identification.
2. It is permissible to fit a maximum of three separate flange support brackets to the original header, any such support flange must not exceed 60mm maximum in total length, and not exceed 40mm maximum in total width.
3. An exhaust probe / fitting is allowed.

32.16 Cooling System

Allowable radiators are the IAME X30 (Type 1 or Type 2)or RL Version, PRD 350x200mm or PRD 400x235mm Version, Rotax FR125 Max
IAME Type 1 may not have punched markings as per homologation papers

32.17 Non-Tech Items

1. Unless specified, non-tech items are to be of the same type and style as the original. No alteration from the original manufacturers specifications is permitted to fit a non-tech item.
2. Engraving, stamping or marking an Engine for identification purposes is permitted. Any such engraving, stamping or marking must not obscure any homologation or identification markings on the Engine or its ancillary components.
3. Non-tech items for the Parilla Leopard X30 engine include; Air filter / Airbox, Clutch Sprocket, Chain Guard (True-Test Chain Guard permitted), Gaskets, Seals, Big & Little End Roller Cages, Fasteners, Washers, Spark Plug, Spark Plug Lead, Spark Plug Resistor Cap, Main Bearings, Water Hoses, Hose Clamps, Water Pump, Axle O-Ring, Axle Pulley, Thermostat, Exhaust Flex, Battery, Starter Motor, Tryton Carburettor gasket / diaphragm repair kit including needle and seat, Plastic fittings and terminals of the wiring looms and connected components ignition and starter assembly.

32.18 Engine Sealing Method – Refer to Appendix F

IAME Parilla 125cc LEOPARD RL

33 Preamble:
The following are the Technical Specifications for the PARILLA LEOPARD RL 125 engine, as approved by AIDKA. Unless otherwise specified, the engines must be original in all their components according to the PARILLA LEOPARD RL 125 drawings. Homologated drawings are available at www.aidka.com.au The engine must be Australian delivered and imported by an AIDKA authorised importer to be eligible for competition. Neither the engine nor any of its ancillaries may be modified unless specifically authorised within these rules. Only Genuine IAME components that are specifically designed and supplied for the Parilla Leopard RL 125cc engine are legal, unless otherwise specified. Any removal, addition or polishing of material is strictly forbidden. Sandblasting, glass bead blasting, peening, acid etching, spark eroding and/or any other method of metal removal or displacement is not allowed. The use of thermal barrier coatings / ceramic coatings on or in the engine / engine components and on or in exhaust components is prohibited. The use of anti-friction coatings on or in the engine / engine components is prohibited. OEM & Meteor pistons are exempt.

33.1 Displacement:
123.67cm, Stroke 54.00mm. Maximum IAME piston 54.27mm.

33.2 Cylinder:
Cylinder length 89.1 +/-0.1mm. Water connections are free but must retain the homologated position and threaded sizes.

33.3 Cylinder Head:
No material to be added except for spark plug thread repair. Combustion area maybe re-machined but must retain squish band. Distance from spark plug sealing face to combustion sealing face 32.8mm +/-0.25mm. The combustion chamber shall be a minimum of 9.5cc.

33.4 Crankcase,
Crankshaft and Conrod: Crankcase may be repaired externally to repair damage around the clutch side area only. The crankcase maybe machined to allow the fitting of the new style ignition on the older style engines.

33.5 Piston:
Meteor aftermarket piston allowed. Maximum size 54.27. No Modifications allowed.

33.6 Clutch:
No modifications or re lining permitted.

33.7 Reed Block and Reed Valves:
Reed block and reed valves must be of the same style as the original IAME. Reed pedal thickness 0.3mm +/-0.08mm. Carbon fibre reeds are allowable.

33.8 Carburettor:
The only permissible carburettor is the TILLOTSON MODEL HL-334A, MODEL HL-334 AB or TILLOTSON HL-360A.
1a. TILLOTSON HL-334A & HL-334AB. The parallel Carburettor Venturi bore must not exceed 23.25mm at any point. It is permissible to enlarge only existing fuel/air holes, but they may not be deleted or relocated. Air filter adaptor must be OEM with no modifications.
1b. “B” Carburettor may be machined to “A” specs, however any machining of the carburettor convergent entry cone and any blend radius is not permitted to be machined past the front face of the dump tube. The dump tube, whilst dimensionally free in terms of internal passages must be retained and located in its supplied position. The ball and its retaining plate must remain in place.

1c. The throttle bore size has a maximum of 25.5mm. No sleeving of the throttle bore is permitted.

2a. TILLOTSON HL-360A
2b. No modifications to carburettor venturi allowable. It is permissible to enlarge only existing fuel/air holes, but they may not be deleted or relocated. Air filter adaptor must be either PRD Part Number #PRD0109 unmodified or OEM with the inlet diameter of the adapter machined parallel to a maximum bore size of 34.50mm allowable.

33.9

Ignition:
Both the Seletra 4 pole and IAME S.P.A Seletra Digital –K Ignition Systems are allowable. Woodruff Key must be retained, and no modifying permitted. The loom plastic electrical fittings may be replaced with non-genuine fittings. All stator mounting hardware must be as per OEM.

33.10

Muffler:
The only permissible exhausts allowed are those that conform to the drawings in the homologation papers or the PRD "Bubble Pipe". Original header pipe supplied with engine must be used. It is permissible to fit an exhaust flange support bracket to the original header pipe. Any such support must not exceed 60mm in length and 40mm width.

33.11

Cooling System:
Allowable radiators are the IAME X30 or RL Version, PRD 350x200mm or PRD 400x235mm Version, Rotax FR125 Max

33.12

Non-Tech:
Unless specified, non-tech items are to be of the same type and style as the original. No alteration from the original manufacturers specifications is permitted to fit a non-tech item. Non-tech items for the Parilla Leopard RL engine include; Air filter / Airbox, Clutch sprocket, Chain Guard (True-Test Chain Guard permitted), Gaskets, Seals, Big & Little End Roller Cages, Fasteners, Washers, Spark Plug, Spark Plug Lead, Spark Plug Cap, Main Bearings, Water Hoses, Hose Clamps, Water Pump, Axle O-Ring, Axle Pulley, Thermostat, Exhaust Flex, Battery, Starter Motor, Carburettor gasket / diaphragm repair kit including needle and seat, plastic fittings on the electrical looms for the ignition and starter assembly.

33.13

Engine Sealing Method – Refer to Appendix F

BOMBARDIER ROTAX FR125 MAX

34 Preamble:
The following are the Technical Specifications for the Rotax FR125 Max engine, as approved by AIDKA. Unless otherwise specified, the engines must be original in all their components according to the Rotax FR125 Max drawings. Homologated drawings are available at www.aidka.com.au. The engine must be Australian delivered and imported by an AIDKA authorised importer to be eligible for competition. The engine must have the official Formula Rotax Australia stamp on the crankcase and also on the reed block face of the cylinder to be eligible to compete. Neither the engine nor any of its ancillaries may be modified unless specifically authorised within these rules. Only Genuine Rotax components that are specifically designed and supplied for the Rotax FR125 Max engine are legal, unless otherwise specified. Any removal, addition or polishing of material is strictly forbidden. Sandblasting, glass bead blasting, peening, acid etching, spark eroding and/or any other method of metal removal or displacement is not allowed. The use of thermal barrier coatings / ceramic coatings on or in the engine / engine components and on or in exhaust components is prohibited. The use of anti-friction coatings on or in the engine / engine components is prohibited. OEM pistons are exempt.

34.1 The Tech committee may review the list of components and add components if required.

34.2 Internal and External Additions:
No additional material may be added except in the case of engine repairs and shall only restore the engine or components to original specifications.
1. The use of thermal barrier coatings/ceramic coatings on or in the engine components and on or in the exhaust system is prohibited.
2. The use of anti-friction coatings in or on the engine/engine components is prohibited unless otherwise supplied OEM. The only exceptions to this are the Gilnisil coating of the cylinder bore and the coating to the piston skirt.

34.3 Legal Additions:
Chain guard, motor mount, radiator mount, temperature gauge and tachometer/hour meter, exhaust gas temperature fitting.

34.4 Non-tech Items:
Battery, Fuel Filter, Radiator Hoses, clamps pulse line, switches, ancillary mounts, fasteners, circlips, washers, bearings, spark plugs, gaskets, O-rings, piston pin, springs, seals, old version clutch drum, drive sprocket, rings, starter motor, old version clutch flywheel, thermostats and housings. No alteration from original manufactures specification is permitted to fit a non-tech item.

Engine Specification for 223 997 or 223 996 Cylinders

Squish Gap
1. FR 125 Max 1.00 mm – 1.50 mm
2. The squish gap must be measured with a certified slide gauge and by using a 2 mm tin wire.
The crankshaft must be turned by hand slowly over TDC (top dead centre) to squeeze the tin wire. The squish gap must be measured on the left and right side in the direction of the piston pin. The average value of the two measurements counts. Recommended 2mm tin wire: part no. 580 130
3. Combustion Chamber Insert
Cast identification code has to be "223 389" or "223 389 1" or "223 389 2" or 223 389 2/1" or “223 389 2/2”.
4. Casted wording "ROTAX" and/or "MADE IN AUSTRIA" must be shown.
5. Heights of combustion chamber insert have to be 27.55 mm with a tolerance of +0.0/-0.1 mm (A) and 28.80 mm with a tolerance of +/- 0.2 mm (B).

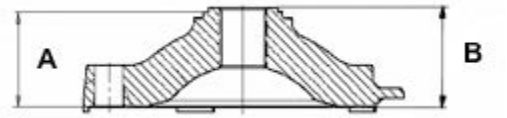

6. The profile of the combustion chamber insert has to be checked with a template (ROTAX part no. 277 390). The crack of light between the template and the profile of

the combustion chamber insert has to be the same over the whole profile. NOTE: If the combustion chamber insert fails the template check as described herein, detailed measurements of the combustion chamber insert must be taken to determine conformity or nonconformity of the component.

34.5 Cylinder Head Volume:
Minimum of 11.0cc.

34.6 Displacement:
125.0cm3 maximum.

34.7 Combustion Chamber Insert:
Identification code has to be 223 389, 223 389 1 or 223 389 2. No material may be added except to repair the spark plug thread and or spark plug seal surface. Machined surfaces may be re-machined if using cylinder 223997. Cylinder head insert must retain both the squish band and visually spherical combustion chamber. O-Ring must be fitted. The combustion chamber/squish area shall not protrude beyond the ceiling face of the head insert. “Rotax” and/or “Made in Austria” must be cast in the combustion insert.

34.8 Spark Plug Thread Length:
Maximum spark plug thread length shall be 20mm.

34.9 Piston:
OEM or Meteor only, uncoated or coated, aluminium cast piston with one (1) 1.0mm rectangular piston ring. The OEM piston has to show on the inside the words “ELKO” and “Made in Austria” in the casting. Machined areas are: top end of piston, outside diameter, one groove for the piston ring, bore for the piston pin, inside diameter at bottom end of piston. All other surfaces are not machined and have a cast surface.

34.10 Gudgeon Pin:
Gudgeon pin to be made of magnetic steel and same style as OEM.

34.11 Cylinder:
Light alloy cylinder with GILNISIL plating, configuration with one main exhaust port and pneumatic adjust valve. Any replating is not allowed. Maximum bore: 54.035mm (measured 10mm above the exhaust port). Cylinder has to be marked with the Rotax logo, identification code223 997 or 223996. All ports and passages are cast finish except some pre-existing factory removal of flashing. All ports have chamfered edges to prevent ring snagging. Any additional machining is not permitted. Cylinder must have the official Formula Rotax stamp on the inlet face. Piston travel check using 5.0mm rod. Minimum 32.8mm, Maximum 33.8mm. If you are using cylinder 223996 or any future cylinder volution, the cylinder must remain as supplied by the manufacturer and cannot be re-machined. Height of cylinder must be 87mm with tolerance of -.05/+0.1 mm. Due to manufacturing procedures some cylinders may have been machined on the exhaust flange

Cylinder Base Gaskets:
34.12 Must be dimensionally the same size and shape as original and cannot be designed to decrease the size of the transfer ports.

34.13 Inlet System:
Intake manifold is marked with the name Rotax and the identification code 267915 or 267916, No grinding or machining is permitted, however some factory flash removal may be present at the junction of the inside contour and the carburettor stop mounting face. This is a manual trimming operation consisting of a small corner break of less than 1mm in width. Reed valve assembly is marked with the name Rotax and the identification code 22438 or 224389. The reed valve assembly is equipped with 2 pedal stops and 2 reeds, each having 3 pedals. The maximum allowable width between the inside faces of the 2 metal reed valve stops is 22.0mm. The thickness of the reeds is 0.6mm + - 0.10mm. Maximum reed block gasket thickness is 4.0mm. The addition of one Rotax reed block gasket, maximum of 1.0mm between the carburettor manifold and the reed block is permitted.

34.14 Exhaust Power Valve:

As supplied by the manufacturer with no modifications allowed, maximum thickness of Power Valve gasket/s is 2.0mm. Original spring must be fitted. Any external adjustment or blocking to this once the engine is running is illegal. Additional fasteners or securing devices may be fitted/added. Length of exhaust valve is 36.5mm +0.2mm/-0.3mm, Width of collar is 4.8mm +/-0.3mm.

34.15 Crankshaft:
As supplied by the manufacturer with no modifications permissible. Stroke 54.5mm +/-0.02mm.

34.16 Balance Shaft:
No modification allowed. Must be installed and operational. Minimum weight of the dry balance shaft must be not less than 355 grams for balance shaft, Rotax part number 237 945 and 255grams for balance shaft, Rotax part number 237 949. Balance gears must be installed and must be correctly aligned according to the instruction in the repair manual.

34.17 Conrod:
As supplied by the manufacturer. Any grinding/ polishing or modification is not permitted. Conrod has to be marked with number “213” or “365” or “367” on shaft,

34.18 Crankcase:
As supplied by the manufacturer. Zero grinding/polishing in the two main transfer passages. Must have the official Formula Rotax Australia stamp on the crankcase deck.

34.19 Ignition:
DENSO digital ignition only, no adjustment permitted or possible. Ignition coil has the following marks close to the outlet of the high-tension cable, cast in the case. DENSO and 129000. The ignition coil must have 3 pins at the terminal. The only allowable spark plug cap is NGK Type TB05EMA. Any modification to any part of the ignition system and/or crank-shaft to alter ignition timing or rev limiter is illegal. The ignition pickup must be marked with the numbers 029600-0710, followed by a variable production code in the second line.

34.20 Carburettor:
DELL’ORTO: The carburettor body, slide, needle, atomiser tube and atomiser insert (either spec 1 or spec 2 is permissible) to remain as originally supplied and cannot be subject to any modification. No additions or additional machining filing, drilling or polishing etc is permitted to these items; this includes the bore/throat. “VHSB 34” cast in the housing of the carburettor. “QD” or “QS” stamped in the housing of the carburettor. Atomiser tube stamped with “266 FN”. Needle stamped with "K 54" or "K 27" or "K98" or others as nominated in the future. Slide marked #40 only.
The size of any hole or any of the following is unregulated: main jet, needle and seat, pilot jet, pilot jet emulsion insert choke jet. The position of the float/float arms and the weight of the floats are unregulated. All items (jets, needles etc) referred to must be present and operational. With the exception of the choke, no changes or adjustments can be made to the carburettor once the engine is running.

34.21 Fuel Pump:
Original MIKUNI diaphragm pump only. Place of fixing is free.

34.22 Radiator:
Allowable radiators are the IAME X30 or RL Version, PRD 350x200mm or PRD 400x235mm Version, Rotax FR125 Max Additional cooling devices are not permitted. The removal of the thermostat from the cylinder head cover is acceptable

34.23 Clutch:
Dry Centrifugal Clutch - using genuine components only. Whilst on level ground the kart (with Driver in kart) must start to move under its own power, when the engine speed reaches 3000 rpm or less. The use of a PRD clutch drum and sprocket as supplied by manufacturer is optional.

34.24 Intake Silencer:
The original intake silencer must be fitted. The original foam air filter may be replaced with either a flat style or cylindrical style filter providing all air to the engine passes through the air box intake tube.

34.25 Exhaust System:
Must be supplied by Rotax and cannot be modified except for, a) the replacement of the silence absorption material and/or b) the addition of an exhaust gas temperature fitting. Standard engine/pipe coupling must be used. Exhaust pipe with after muffler. Length of inlet cone: type a and type b: 592mm+/- 5mm (measured along the body of the exhaust pipe, not the seam, from the beginning of the exhaust to the start of the cylindrical part). Length of the cylindrical part of the exhaust pipe: type a and type b: 125mm +/- 5mm. Length of end cone: type a: 250mm +/- 5mm type b: 225mm +/- 5mm. Outside diameter of 180 bent tube: type a: 30mm +/- 3mm type b: 41mm + 1.5mm -1.0mm (measured at beginning end of bend). Hole diameter of end cap of silencer 21mm +0.2mm –0.5mm. Painting/plating of the exhaust muffler is permitted with the exception of thermal barriers/coatings/paint. NOTE: Any accidental damage to the unit will not incur a technical breach of these Rules of Racing, however any attempt to modify or alter the exhaust system by cutting, or fabrication will automatically remove eligibility of the exhaust system. Welding of the exhaust system to repair a crack, hole or to fit a patch etc. is permitted. Only one exhaust gasket is permitted, maximum thickness of 2mm.

34.26 Exhaust Muffler:
Noise isolating mat can only be replaced by an original Rotax spare part.
End cap rivets may be replaced with bolts/cap-screws etc.

Engine Specification for 223 993 Cylinders

BRP-ROTAX FR 125 MAX

34.27 Squish Gap
1. FR 125 Max 1.00 mm – 1.50 mm
2. The squish gap must be measured with a certified slide gauge and by using a 2 mm tin wire. The crankshaft must be turned by hand slowly over TDC (top dead centre) to squeeze the tin wire. The squish gap must be measured on the left and right side in the direction of the piston pin. The average value of the two measurements counts. Recommended 2mm tin wire - part no. 580 130

34.28 Combustion Chamber Insert
1. Cast identification code has to be "223 389" or "223 389 1" or "223 389 2" or 223 389 2/1" or "223 389 2/2".
2. Casted wording "ROTAX" and/or "MADE IN AUSTRIA" must be shown.
3. Heights of combustion chamber insert have to be 27.55 mm with a tolerance of +0.0/-0.1 mm (A) and 28.80 mm with a tolerance of +/- 0.2 mm (B).

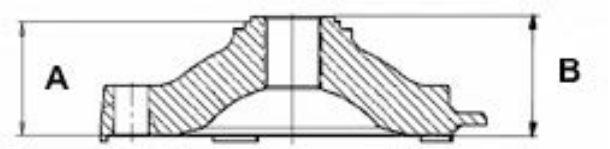

4. The profile of the combustion chamber insert has to be checked with a template (ROTAX part no. 277 390). The crack of light between the template and the profile of the combustion chamber insert has to be the same over the whole profile. NOTE: If the combustion chamber insert fails the template check as described herein, detailed measurements of the combustion chamber insert must be taken to determine conformity or nonconformity of the component.

34.29 Piston with Ring Assembly.
1. Original, coated or uncoated, aluminium, cast piston with one piston ring. The piston has to show on the inside the cast wording "ELKO" and "MADE IN AUSTRIA" .
2. Machined areas are: Top end of piston, outside diameter, groove for the piston ring, bore for the piston pin, inside diameter at bottom end of piston and some pre-existing factory removal of flashing at the cut out of the piston skirt. All other surfaces are not machined and have cast surface.

3. Original, 1 mm, magnetic, rectangular piston ring. Piston ring is marked either with "E CRY K" or "ROTAX 215 547" or "ROTAX 215 548".

34.30 Gudgeon Pin

1. Gudgeon pin is made out of magnetic steel.
2. Dimensions must be according to the homologation drawing.
3. The minimum weight of the gudgen pin must be no lower than 32.10 grams.

34.31 Cylinder

1. Light-alloy-cylinder with GILNISIL-plating. Any re-plating of cylinder is not allowed.
2.Cylinder with one main exhaust port.
3. Maximum bore of cylinder = 54,035 mm (measured 10 mm above the exhaust port)
4. Cylinder has to be marked with the "ROTAX" logo (see pictures below).
5. FR 125 MAX Cylinder with pneumatic timed exhaust valve. Cylinder has to be marked with identification code 223 993
6. Height of cylinder has to be 87 mm -0.05/+0.1 mm.
7. All transfer ports and passages have cast finish surface except some removal (done by the manufacturer) of cast burr at the inlet passage and exhaust port and passages. All ports have chamfered edges to prevent ring snagging. Any additional machining is not permitted. The top edge of exhaust port may show some pre-existing machining from the manufacturer. The sealing flange for the exhaust socket may show signs of machining from the manufacture.
8. All ports have chamfered edges. Any additional machining is not permitted. On cylinders marked 223 993 the upper edge of the central boost port may show factory machining.
9. The sealing flange for the exhaust socket may show either cast finish surface or signs of machining from the manufacturer.
10. The top edge of the exhaust port may show either just a cast finish surface or signs of a CNC machining or signs of CNC machining in combination with signs of manual grinding.
11. The exhaust port may show partial manual grinding done by the manufacturer to eliminate minor casting defects and to eliminate the NIKASIL burr at the end of the NIKASIL plating.
12. At cylinders 223 993 exhaust port may show factory machining all around
13. Exhaust port timing. The "exhaust port timing" (distance from the top of the cylinder to the top of the exhaust port) has to be checked by means of the template (ROTAX part no. 277 397) Insert the template into the cylinder, that the template is touching the cylinder wall and that the finger of the template is located in the middle of the exhaust port (highest point). Move the template upwards, until the finger is touching the top edge of the exhaust port. Insert a filler gauge between the top of the cylinder and the template. It must not be possible to fit the feeler gauge specified below. FR 125 MAX: 0.75 mm. At cylinders 223 993 it is also legal if the template doesn't fit in at all.

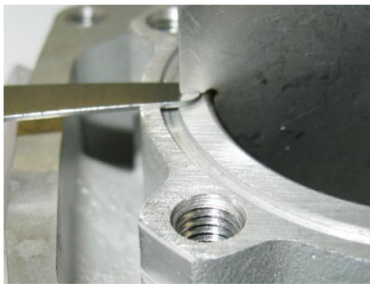

14. Exhaust valve. If the piston is moved in direction top of cylinder and first time covering completely the exhaust port, it must be possible to insert the exhaust valve gauge (ROTAX part no.277 030) until it stops at the surface of the cylinder (a feeler gauge of 0.05 mm must not be possible to fit in).

34.32 Inlet system

1. Inlet manifold is marked with the name "ROTAX" and the identification code"267 915" or "267916"
2. Some factory flash removal may be present at the conjunction of the inside contour and the carburettor stop mounting face. This is a manual trimming operation consisting of a small corner break of less than 3 mm in width. No additional grinding or machining is permitted.
3. The reed valve assembly part no. 224389 is equipped with 2 pedal stops and 2 reeds, each having 3 pedals.
4. The thickness of the reeds is 0.6mm +/-0.10mm.

34.33 Stroke

1. 54,5 mm +/-0,1 mm
2. Con rod has to show forged numbers "213", "365" or "367" on shaft. Shaft of con rod is not machined. Grinding or polishing of shaft of con rod is not permitted.

34.34 Balance Shaft

1. Balance shaft and balance gears must be installed.
2. Configurations of part no. 237 949 (equal with 237 948) only is legal.
3. Surface (1) is not machined and must show cast surface.
4. Measurement from centre of balance shaft to outer diameter of fly weight of balance shaft at defined length must not be lower than specified.
5. The minimum weigh of the dry balance shaft must not be lower than:- 255 grams for balance shaft ROTAX part no. 237 949 (equal with 237 948).

34.35 Crankcase

As supplied by the manufacturer. No grinding/polishing is permitted in the two main transfer passages as well as in the crank area. The use of the Black EVO crankcase Z295914 is permitted

34.36 Balance Drive

1. Only steel balance gears are legal to be used.
2. Balance gears must be installed and must be aligned according to the instruction in the repair manual. Mixing of steel balance gears of different width (6.0 and 9.0 mm) is strictly forbidden.

34.37 Ignition System

1. DENSO digital battery ignition, variable ignition timing, no adjustment necessary and possible.
Race officials may request at any time that the competitor replace the ignition coil with a new unit provided by the race administration.
2. The casting of the ignition coil has to show the following in casting "129000-" and "DENSO".
3. Ignition coil must show 3 pins at the terminal.
4. Connector housing of ignition coil must have either black or green colour.
5. The ignition coil has to be fixed by means of 2 original silent blocks to the gearbox cover. Only in case of chassis component interference with the original mounting location of the ignition coil, a supplementary extension bracket, rigidly constructed and fabricated of solid metal, of minimum dimensions and attached to the original case mounting holes, is permitted for mounting of the coil.
6. Minimum length of ignition wire (high tension wire) is 210 mm from outlet of cable at ignition coil to outlet of cable at spark plug connector (= the visible length of wire) Ignition coil must be in working condition (to be tested in case of doubt) The pick up must be marked with the numbers 029600- 0710, followed by a variable production code in the 2nd line. HINT: In case of doubt an easy check is to place a steel ball (3-5 mm in diameter) on the pickup (engine side), the steel ball must stay in the centre of the pickup surface.
7. Spark plug cap must be marked with "NGK TB05EMA".
8. Battery must be fitted to the chassis with at least 2 screws. Position of the battery is free.
9. The earth strap may be fitted with a connector for ease of removal of the engine. Rotax Wiring Harness to be OEM only, no fittings, no repairs. The ignition coil can be relocated from the crankcase as far as the OEM harness will permit.

34.38 Exhaust Valve

1. As supplied by the manufacturer with no modification allowed. Compression spring must be fitted.

2. Length of the exhaust valve is 36,5 mm +0.20 mm /-0.30 mm.
3. Width of collar is 4.8 mm +/-0.3 mm
4. Any adjustment or blocking to this valve once the engine is running is illegal.
5. Exhaust power valve stud part no. 441355 Exhaust power valve piston part no. 854440 Exhaust power valve bellow part no. 260723 Exhaust power valve bellow spring part no. 939280 Exhaust power valve adjustment screw part no. 641890 Lower exhaust power valve spring part no. 838255

34.39 Centrifugal Clutch

1. Dry centrifugal clutch, engagement maximum at 4.000 r.p.m. That means, that the kart (without driver) must start to move latest at an engine speed of maximum 4.000 r.p.m. There are two versions of the clutch shoe (element part # 3 on the diagram) and both are legal to be used. The older version of the clutch shoe can be either untreated or nitrated configuration.

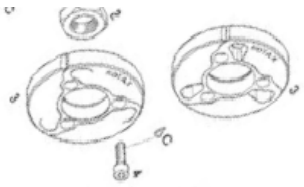

Engines must be fitted the new needle cage bearing 15X19X17 (item 9) as well as new O-Ring 12X2,5 (item 10) only. Except if the plain bearing 15X17X20 (item 9) designed for 11teeth sprocket is used, in this case no O-ring must be used.
2. No extra lubrication or additional substance allowed inside the clutch drum additional to the grease that originates from lubrication of the needle cage bearing and enters the clutch area.
3. Only fixation nut as well as inside of drum show signs of grease, running surface of clutch is completely dry. In case Plain bearing for 11teeth sprocket is used clutch area must be absolutely
free grease or any additional substance.
4. Steel clutch (both versions) and clutch drum must be within following specifications.
5. Height of clutch Minimum: 11.45 mm.
6. Thickness of clutch shoe Measurement has to be done at the 3 open ends of the clutch shoes, 5 - 10 mm from the machined groove (all clutch shoes must be completely closed at measurement - no gap). No measurement may be below 24.10 mm.
7. Outer diameter of clutch drum. Diameter has to be measured with a sliding caliper. The measurement has to be done in the middle of the clutch drum (in the contact area of the clutch drum) assembly.
Version A (659930) Outer minimum diameter: 89.50 mm. Inner diameter Maximum 84.50 mm.
Version B (659937) reinforced ring outer diameter minimum: 94.50 mm. Outer diameter minimum: 89.50 mm. Inner diameter Maximum: 84.50 mm.
8. Height of sprocket with clutch drum assembly. Minimum height: 33.90 mm.
9. The original Rotax clutch (3 spring) is eligible to be used until further notice at any event.

34.40 Intake Silencer

1. Intake silencer with integrated, washable air filter has to be used with all parts as shown at illustration and has to be mounted on the support bracket with two screws (in dry and wet race condition). The original foam air filter may be replaced with either a flat style or cylindrical style filter providing all air to the engine passes through the air box intake tube.

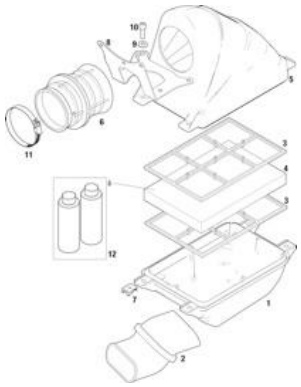

2. Intake silencer case bottom is marked on the inside with the ROTAX part no 225015

3. Intake silencer case, top is marked on the inside with the ROTAX part no. 225 025.

34.41 Carburettor

1. DELL'ORTO carburettor. VHSB 34" cast in the housing of the carburettor.
2. "QD" or "QS" stamped in the housing of the carburettor.
3. The complete inlet bore in the casting of the carburettor must show cast surface.
4. The carburettor slide must show with size "40" in casting and the bottom end of the slide must show cast surface.
5. Jet needle stamped with "K98" only
6. Settings of the carburettor adjustment screws are free.
7. Following two combinations of floats and idle jets are legal:
Combination 1: For carburettor insert 12.5, Floats are marked with "5.2gr" Idle jet and Idle jet insert are stamped with the digits "30"
Combination 2: For carburettor insert 8.5 Floats are marked with "3.6gr" Idle jet and Idle jet insert are stamped with the digits "60"
8. All jets must be correctly seated and securely fitted
9. Needle valve assembly stamped "150"
10. Needle of needle valve marked with diamond symbol "INC" only.
11. Start jet is stamped with digits"60"
12. Needle jet stamped with "FN 266".
13. Total length of needle jet: 54.00 +/- 0.3mm
14. Length of bottom section of needle jet: 11.50 +/- 0.2mm
15. Top bore diameter of needle jet 2.60 +/- 0.15mm
16. 4 x 4 cross holes diameter: Plug gauge 0.90mm may not enter one of the 16 cross holes of the needle jet. (Use jet gauge set ROTAX part no. 281 920)
17. Idle jet 30 and Idle jet insert 30 must be used with carburettor insert stamped 12.5. Plug gauge 0.40mm may **NOT** enter the bore of the idle jet 30. (Use jet gauge set ROTAX part no. 281 920)
18. Plug gauge 0.40mm may NOT enter the bore of the idle jet insert 30. (Use jet gauge set ROTAX part no. 281 920.
19. Plug gauge 0.40mm may NOT enter one of the 4 cross bores of the idle jet insert 30. (Use jet gauge set ROTAX part no. 281 920)
20. Idle jet 60 and Idle jet insert 60 must be use with carburettor insert stamped 8.5.
21. Plug gauge 0.65mm may **NOT** enter the bore of the idle jet 60. (Use jet gauge set ROTAX part no. 281 920)
22. Plug gauge 0.65mm may NOT enter the bore of the idle jet insert 60. (Use jet gauge set ROTAX part no. 281 920.
23. Plug gauge 0.65mm may NOT enter one of the 4 cross bores of the idle jet insert 60. (Use jet gauge set ROTAX part no. 281 920)
24. Carburettor insert must show number stamping of either 8.5 or 12.5 as illustrated on next page.

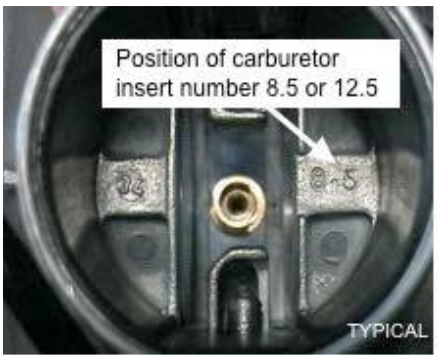

25. Angular bore: Plug gauge 0.60 may not fit. (8.5 Carburettor Insert only) (Use jet gauge set ROTAX part no. 281 920)
26. Vertical bore: Plug gauge 0.90 may not fit. (8.5 Carburettor Insert only) (Use jet gauge set ROTAX part no. 281 920)
27. Position of atomizer: venturi tool set (ROTAX part no. 676034): control pin Ø3.6mm must enter atomizer.
28. Remove atomizer from carburettor body using venturi tool set (ROTAX part no. 676034): Atomizer, total length: 23.75 +/- 0.45mm
29. Atomizer, length of cylindrical part: 15.75 +/- 0.25mm
30. Atomizer, dimension of cutaway: 6.00 +/- 0.15mm
31. Atomizer, diameter of cross bore: 4.05 +/- 0.15mm

32. Optional carburettor plug screw marked “ROTAX” (ROTAX part no 261 030) is legal to be used.
33. The two vent fittings must be connected with the original air vent hose 180mm (ROTAX part no 260 260).

4.42 Fuel Pump
The original MIKUNI Fuel Pump part no 994482 (diaphragm type) must be used.

34.43 Radiator
Allowable radiators are the IAME X30 or RL Version, PRD 350x200mm or PRD 400x235mm Version, Rotax FR125 Max

34.44 Exhaust System
1. Must be as supplied by BRP-POWERTRAIN and cannot be modified except for the replacement of the silencer absorption material and the use of threaded fasteners in place of the rivets for securing the silencer end cap. Standard exhaust socket must be used.
2. Exhaust pipe with after muffler as shown in illustrations.

3.All versions (version with welded on after muffler and version with after muffler fixed by 2 springs) are legal to be used.
4.Version 1, tuned pipe and silencer are one piece. The silencer is welded to the 180° elbow and the tuned pipe (top illustration).
5.Version 2, tuned pipe and silencer are one piece. The silencer is welded to the 180° elbow. Two springs fix the silencer to the tuned pipe (bottom illustration). Following measurements are valid for version 1 and 2

1.Silencer end cap, diameter of hole: 21,0 mm (maximum).
2.Length of inlet cone: 592 mm +/-5 mm (measured on outside from beginning of exhaust pipe until beginning of cylindrical part).
3.Length of cylindrical part of exhaust pipe: 125 mm +/-5 mm.
4.Length of end cone: 225 mm, +/-5 mm.
5.Outside diameter of 180° bent tube: 41mm +1,5 mm/–1,0 mm (measured at the beginning and end of bend).

6.Version 3 (illustrated)-tuned pipe with 180° elbow and silencer are two separate pieces. The silencer is fixed with 2 springs to the 180° elbow and two springs to the tuned pipe. The silencer can be turned that the 90° elbow outlet of the silencer shows either downwards towards the ground (preferred version for lowest noise emissions) or towards the back.It is also allowed to use the silencer end cap (without 90° elbow) and perforated tube of version 1 and 2.
7.Exhaust sockets version 1 and 2 are legal to be used.
Version 1 Without gasket ring (Image 1)
Version 2 With gasket ring (Image 2)
Measurement C must be a minimum of 15.5 mm
Measurement C must be a maximum of 16.5mm
The maximum use of exhaust springs to fix the exhaust to the cylinder is 4 springs.
Just one piece of original isolating mat is allowed to be used. The original exhaust system (tuned pipe and silencer) may not be modified. Additional to the standard isolation mat a special steel isolation mat of the square dimension of 165 +10 mm is legal (not mandatory) to be assembled underneath the standard isolation mat as in the following illustration (ROTAX part no. of kit 297983). Clamp (1) must be fitted at a distance of 18+/-2mm, measured from the end of the tube. Clamp (2) must be fitted at the end area of the steel isolation mat. 10-12mm is a specification for assembly purposes only! Both clamps are mandatory.

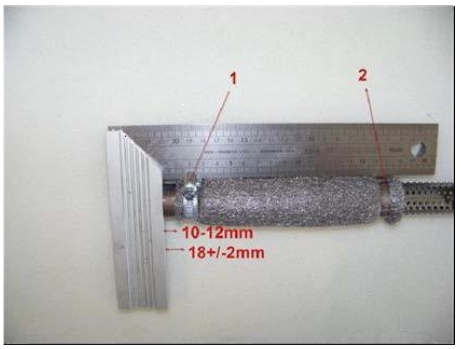

8. For measuring the exhaust gas temperature, it is allowed to weld on a socket on top of the exhaust, 50 mm from the ball joint. The use of a maximum 4 pieces of exhaust springs to fix the exhaust to the cylinder, are allowed.

34.45 **Noise emissions**
Noise isolating mat (see illustration exhaust system) has to be replaced by an original BRP-POWERTRAIN spare part

34.46 **Engine Sealing Method** – Refer to Appendix F

Rule #

PRD FIREBALL 125cc

35 **Preamble**:
The following are the Technical Specifications for the PRD Fireball 125 engine, as approved by AIDKA. Unless otherwise specified, the engines must be original in all their components according to the PRD Fireball 125 drawings. Homologated drawings are available at www.aidka.com.au The engine must be Australian delivered and imported by an AIDKA authorised importer to be eligible for competition. Neither the engine or any of its ancillaries may be modified unless specifically authorised within these rules. Only Genuine IAME components that are specifically designed and supplied for the PRD Fireball 125 engine are legal, unless otherwise specified. Any removal, addition or polishing of material is strictly forbidden. Sandblasting, glass bead blasting, peening, acid etching, spark eroding and/or any other method of metal removal or displacement is not allowed. The use of thermal barrier coatings / ceramic coatings on or in the engine / engine components and on or in exhaust components is prohibited. The use of anti-friction coatings on or in the engine / engine components is prohibited. OEM pistons are exempt

35.1 **Cylinder**:
Must be OEM, All ports and passages are cast finish except some pre-existing factory removal of flashing. No modifications to the ports accepted. Maximum bore 54.28mm

35.2 **Cylinder Head**:
Must be OEM, Minimum volume of 9.5cc, Modification to the cylinder head to achieve minimum ccs is acceptable. Must retain both squish band and spherical combustion chamber.

35.3 **Crankcase & Crankshaft**:
Must be OEM with no modifications. Maximum stroke 54.004mm

35.4 **Conrod**:
Must be OEM, PRD Medium Weight 122grams +/- 4g, modifications.

35.5 **Piston**:
Must be OEM, coated and uncoated pistons allowed as supplied by the manufacture. No modifications.

35.6 **Clutch**:
PRD/Horstman/FX-100 clutch, No modifications allowed.

35.7 **Reed Valve**:
Reed valves must be of the same style as the manufacture. Reed pedal thickness 0.3mm +/- 0.08mm Carbon Fibre reeds are allowable.

35.8 **Carburettor**:
Only permissible carburettor is the Tillotson model HL-360A or Enzo 24mm. Carburettor venturi must remain as supplied from manufacture. Non-Technical items will include, extension to existing low jet, plastic carburettor top, conical cable return spring and cable support bracket

35.9 **Ignition**:
Must be OEM, PRD or PRD Opama or PRD Easystart.

35.10 **Exhaust System**:
OEM Header only, Muffler must be OEM Straight PRD9037/95A, IAME Leopard 10718, or PRD “Bubble Type”. No modifications allowed except the addition of an Exhaust Gas Temperature fitting.

35.11 **Radiator**:
Allowable radiators are the IAME X30 or RL Version, PRD 350x200mm or PRD 400x235mm Version, Rotax FR125 Max

35.12 Non-tech Items:
Unless specified, non-tech items are to be of the same type and style as the original. No alteration from the original manufacturers specifications is permitted to fit a non-tech item. Non-tech items for the PRD Fireball 125 engine include; Air filter / Airbox, Clutch sprocket, Gaskets, Seals, Big & Little End Roller Cages, Fasteners, Washers, Spark Plug, Spark Plug Lead, Spark Plug Resistor Cap, Main Bearings, Water Hoses, Hose Clamps, Water Pump, Axle O-Ring, Axle Pulley, Thermostat, Exhaust Flex, Battery, Starter Motor, Carburettor gasket / diaphragm repair kit including needle and seat, plastic fittings on the electrical looms for the ignition and starter assembly.

35.13 Engine Sealing Method – Refer to Appendix F

PRD 125cc Galaxy

36 **Preamble**:
The following are the Technical Specifications for the PRD GALAXY 125 engine, as approved by AIDKA. Unless otherwise specified, the engines must be original in all their components according to the PRD GALAXY 125 drawings. Homologated drawings are available at www.aidka.com.au The engine must be Australian delivered and imported by an AIDKA authorised importer to be eligible for competition. Neither the engine nor any of its ancillaries may be modified unless specifically authorised within these rules. Only Genuine PRD components that are specifically designed and supplied for the PRD Galaxy engine are legal, unless otherwise specified. Any removal, addition or polishing of material is strictly forbidden. Sandblasting, glass bead blasting, peening, acid etching, spark eroding and/or any other method of metal removal or displacement is not allowed. The use of thermal barrier coatings / ceramic coatings on or in the engine / engine components and on or in exhaust components is prohibited. The use of anti-friction coatings on or in the engine / engine components is prohibited. OEM pistons are exempt.

36.1 **Displacement**
Bore 53.90, Stroke 54.00 +/- 0.004, Max Bore 54.40

36.2 **Cylinder Head**
1. Aluminium Cylinder Head must be of original engine manufacturer and conform to drawings supplied by manufacturer with no modifications.
2. Minimum 10.5cc 3. Repairing the spark plug thread is permissible.

36.3 **Cylinder**
1. Must be OEM with no modifications.
2. All passages are cast finish except some pre-existing factory removal of flashing
3. No modifications to the ports accepted.
4. A base gasket must be retained.

36.4 **Piston & Piston Ring**
1. Must be original PRD OEM,
2. Must be marked with PRD inside the casting.
3. No modifications

36.5 **Piston Pin**
1. Must be PRD OEM
2. No Modifications

36.6 **Conrod**
1. Must be PRD OEM as marked.
2. No Modifications

36.7 **Crank Pin**
1. Must be PRD OEM
2. No Modifications

36.8 **Crankshaft**
1. Must be PRD OEM
2. No material can be removed or added.

36.9 **Reed Manifold**
1. Must be PRD Top Mount OEM
2. No modifications

36.10 **Reed Block & Reed Petals**
1. Reed Block must be PRD OEM with no modifications
2. Reed valves must be the same style as the original, Carbon Fibre reeds are allowable
3. Reed thickness 0.30mm +/- 0.08mm

36.11 Carburettor

1. Must carry PRD markings as supplied by PRD.
2. No adding or removing material is permitted apart from repairing threads

36.12 Ignition

1. Coil / CDI - PVL model 590 221 only
2. Stator - PVL Ident Nr 1045 only
3. Rotor - PVL only 4. Spark Plug Cap 401 222 only

36.13 Power valve Assembly

Must be OEM

36.14 Exhaust Header & Spacers

1. Must be OEM
2. The fitting of PRD OEM exhaust spacers between the header and cylinder is permitted to adjust the exhaust length.
3. Maximum thickness of Exhaust Spacers & gaskets 35mm

36.15 Exhaust Muffler

1. Must be OEM
2. No modifications

36.16 Clutch Assembly

1. Must be OEM
2. PRD Metal Clutch assembly or PRD Clutch with linings assembly is acceptable. Parts are interchangeable.

36.17 Radiator

Allowable radiators are the IAME X30 or RL Version, PRD 350x200mm or PRD 400x235mm Version, Rotax FR125 Max

36.18 Crankcase

1. Must be OEM with no modifications.
2. Engine number must start with 'AU'.

36.19 Wire loom

1. Must be OEM.
2. Wire loom plugs and fittings can be repaired or replaced with non-genuine parts.

36.20 Airbox

Airbox/Air filter is a non-tech item.

36.21 Non-Tech Items

No alterations from original manufacturers specification is permitted to fit a non tech item. Unless specified, non-tech items are to be of the same type and style as the original. No alteration from the original manufacturers specifications is permitted to fit a non-tech item. Non-tech items for the PRD Galaxy125 engine include; Air filter / Airbox, Clutch sprocket, Gaskets, Seals, Big & Little End Roller Cages, Fasteners, Washers, Spark Plug, Spark Plug Lead, Main Bearings, Water Hoses, Hose Clamps, Water Pump, Axle O-Ring, Axle Pulley, Thermostat, Exhaust Flex, Battery, Starter Motor, Carburettor gasket / diaphragm repair kit including needle and seat, plastic fittings on the electrical looms for the ignition and starter assembly.

36.22 Engine Sealing Method – Refer to Appendix F

AIDKA
Australian Independent Dirt Kart Association

APPENDIXES

Title Information
AIDKA Penalties
AIDKA Track Safety
AIDKA List of Fees
AIDKA Junior Training Program

TITLE INFORMATION

New #

Appendix A

AUSTRALIAN TITLES: TO BE CONTESTED EVERY 2 YEARS
STATE OR TERRITORY TITLES: TO BE CONTESTED ON A YEARLY BASIS

1 (Any Club intending to nominate for a Title Event must have been affiliated with AIDKA for a period of 2 years and held regular race meetings. AIDKA Affiliated clubs can apply to host a National Title. However, any Club intending to nominate must have held a minimum of one State/Territory title.)

a) To compete in a class, you must have the appropriate Licence grade or higher for that class.
b) All drivers nominating for a title event must have completed a minimum of 3 meetings in the 12 months preceding close of nominations of that Title event, in that grade to be eligible to run a title event.
c) Endorsed or Probationary drivers must complete all endorsements plus an additional 3 race meetings competing in a full grid draw (i.e., Not ROF) before the close of nominations.
d) **LICENCE GRADES**: As per Rules 6.3 & 6.4

2 Nominations shall only be accepted as per the prospectus with any requested information and the appropriate fees. The nomination forms, payment and copy of drivers Logbook must be received by AIDKA so that all nominations can be verified, and acceptance granted. AIDKA will notify the host club of the status of nominations. **Refund Policy:** Any nomination cancelled before close of nomination will incur a 50% fee. Cancellations after closing will result in a loss of nomination fee. The only exemption are cancellations due to a valid medical reason (certificate required) these cancellations will receive a full refund.

3 All nominations shall close a minimum of 30 days to a maximum of 40 days prior to the first day of the event.

4 AIDKA has 5 working days (after close of nominations) to make sure that classes meet Appendix "A" clause 5. Where a Class has insufficient nominations, the Host Club may seek further nominations to enable the Class to be contested. This will also enable competitors to nominate for another class should they so desire where there are insufficient nominations for a Class.

5
a) A minimum of ten (10) nominations will constitute a class for a title event with over 200 nominations. If insufficient nominations are then not received, a driver may choose to move to another class or receive a refund for that class. All current title holders in a title class that is non-prescribed will have their status removed.
b) A minimum of eight (8) nominations will constitute a class for a title event with 200 or less nominations. If insufficient nominations are then not received, a driver may choose to move to another class or receive a refund for that class. Clubs may elect to run a non-prescribed title class but will not be awarded title plates/positions. All current title holders in a class that is non-prescribed will have their status removed.

6
a) Title Events - Australian, State or Territory Titles shall be sanctioned as 1 Event conducted on consecutive days.
b) The Event to include practice and the race format that the Title committee has chosen.
c) In the event of a cancelled Title event the hosting club and AIDKA Executive shall determine the refund amounts to be give back to drivers dependent on the following scenarios:
   - Event started and not completed; no refund is required.
   - Event is cancelled within 7 days and prior to first race, minimum 50% refund.
   - Event is cancelled from close of nomination until 7 days prior to the event, minimum 75% refund.
   - Event is cancelled prior to close of nominations, full refund is required.
d) In the event of a cancelled Title event, give the host club one month to make a decision to re-run or decline the offer. If club, choose to re-run it must be held within 12 months of the cancelled event. Any dates outside this must be presented and approved by AIDKA Council

e) AIDKA Executive in conjunction with the host club, to determine alternative date(s) should the event be un-concluded.

7 Each class of racing at a Title event shall be contested over:

a) 4 heats and a final
b) 6 heats dropping the worst heat to determine the winner
c) 8 heats dropping the worst heat to determine the winner
d) 4 heats to determine the starting position for the final where the finishing order of the final determines the overall winner
e) Time trials, heats, pre final/B Main & A Main to determine the winner

The appointed title committee will determine the race format.
Supplementary Rules and Regulations (including proposed program) shall be submitted to AIDKA for Title Events by the host Club at least two (2) months prior to the Event.

8 In the Event that more than one division of a class is contested, a total mix is to occur between the divisions whilst still adhering to 8 above. Redraws can be made if lack of nominated Drivers to a split field on the day.

9 Where applicable, the Final will be eligible to only the top twenty point's scores of a class with the starting position being determined by highest points starting from the front.

10 Where there are less than 3 split fields, the host club and AIDKA Executive has the option for the title to be contested over 2 days.

11 Once the point scores have been collated and checked by the AIDKA Points Auditor, the final positions/names will be placed on the results board for the drivers to review. A driver who has any concerns in reference to their class results, has up to 60 minutes to contact the Officials via the Drivers Representative. The timeframe shall commence immediately that Classes results sheet is placed on the results board. At the completion of this timeframe it will be agreed by all persons that they accept the results as being final and waive their rights.

12 Upon removal of the lists by the Secretary at the end of the said timeframe (60 minutes), it will be agreed by all persons that they accept the results as being final and waive their rights.

13 Caution lights and/or flags may be used as determined by NTSO

14 All motors at the Titles shall be sealed to be eligible to be used. The seals will be provided by AIDKA

15 An engine seal may be re-issued before the commencement of the first race. The original seal must be handed back to the appointed official and a new seal will be recorded and issued. This will not count towards your seal allocation.
Once racing has commenced, an additional seal (or 2 for 200cc open or KT Twin) can be issued. Any engine used must be presented for engine measuring if required with the seal still attached at the conclusion of the race meeting. Seals must not be cut and reissued during the meeting.
Chassis seals must be fitted to the chassis at the bottom of the steering column where possible and at a point where they cannot be removed from the kart.

16 Engine Sealing Method – Refer to Appendix F

17 All header pipes are to be sealed to the satisfaction of the scrutineers.

18

a) The motors of the leading points scorers after the finals shall be checked by the engine measurer(s) appointed on the day at least until the positions 1,2 and 3 are deemed to be legal. It is the engine measurer's prerogative to check other motors if required.
b) Competitors shall supply the engine measures the following equipment:
c) Junior & KT Classes – Engine from air filter adapter through to the header pipe including carby and electrics. Junior classes may have their muffler/exhaust also requested
d) 125 Classes - Engine from air filter adapter through to the header pipe including carby, electrics excluding loom and ancillaries. The muffler/exhaust and complete electrics may also requested.
e) Open Classes – Engine not including carby, header or electrics
f) A Grade Classes – Engine Measurer to advise on the day

g) Failure to present the engine and required components before leaving the impound area will result in the equipment not presented being deemed illegal

19 No more than 2 motors (which includes one spare), will be permitted in Title Events for any kart, other than for 200cc Open and KT Twin Engine powered karts, where 4 motors (which include 2 spares) will be permitted.

20 The AIDKA Australian Title/State/Territory Committee or their representative shall have ultimate control over the selection of Officials, timing and administration of the Australian/State/Territory Titles.

21 Stewards and Starters at Title events must hold State or National Steward Accreditation where possible. Club stewards may be used at the discretion of the National Stewards Co-ordinator. Facilities must be provided to ensure the Chief Steward, Starter and all Stewards are able to clearly communicate.

22 Junior parents are not permitted on the infield during Junior races at Title events unless requested by the officials of the event. One assistant per flag position must be in place for Junior Races, to assist with kart removal.

23 Each kart will only be used for one entry at Title Events.

24 A Pit Steward shall be appointed for all Title Events to control the in-grid and advise drivers to report to the Steward or that they are to be weighted or have fuel testing carried out. The presence of a Steward also stops friction between drivers coming off the track.

25 No kart is to be allowed to have any mechanical, or spark plug adjustments made to it that requires tools of any kind once the kart has been pushed off the grid line at any AIDKA Title Event. Karts stopping due to contact on the formation laps will be given an opportunity to restart.

26 All drivers competing at a title event shall get a minimum of 3 laps practice in one direction. All other practice sessions are optional. Visiting interstate drivers at Title events get a minimum 3 laps practice in both directions. Practice may be held prior to the first day of racing.

27 State Title plates may be used during a State Title event.

29 State Titles in States with less than 60 racing members shall be exempt to the following rules:

a) Appendix “A” (5) and (23)
Only classes with a minimum of 8 senior (or 5 junior) nominations will be awarded a title plate.
b) shall be allowed to start non-qualified drivers at the rear of field.
c) If less than 8 nominations received, AIDKA has the option to remove the class and offer the drivers a refund or other class options.

30 The track will be closed for kart use for four days prior to the commencement of a Title event.

31 Lowest licence number gets first preference for race number.

32 A Title Prospectus must include all AIDKA events (practice, sign in, dates etc). Once the prospectus is finalised this cannot be altered unless there is a lack of nominations or classes where the time schedule can be reduced. A title event cannot be extended after the prospectus has been released

AIDKA PENALTIES

Rule #

Appendix B Please refer to the AIDKA Penalty Handbook for full details of penalties. The Handbook is available on the AIDKA website, AIDKA App, from your local club and is detailed below.

The AIDKA Officials Sub-Committee and the AIDKA Board reserve the right to review and amend these penalties at any time.

AUSTRALIAN INDEPENDENT DIRT KART ASSOCIATION INC.

AIDKA PENALTIES HANDBOOK

The AIDKA Penalties Handbook outlines the penalties that apply for rule breaches, as detailed below.

POINTS PENALTY = Racing for points
POSITION PENALTY = Racing for position (eg. Winner take all final)

RACE STARTS

OFFENCE/INFRINGEMENT	RULE No.	ACTION/PENALTY	RULE DESCRIPTION
Pole sitter has excessive speed on form up lap(s)	14.6	Send Rear of Field (preference) or 10 points/5 positions post race	The pole position holder governs the speed of a rolling start. This speed shall not be excessive as to make it difficult for the karts at the rear of the field to keep formation.
Kart accelerates before start signal is given	14.7	Send Rear of Field (preference) or 10 points/5 positions post race	No karts shall accelerate until the start signal is given.
Breaking formation prior to the start signal is given	14.8	Send Rear of Field (preference) or 10 points/5 positions post race	No karts shall break formation until the start signal is given unless they break formation and decelerate because of unforeseen circumstances
3 karts stop prior to the first corner markers on first lap	14.10	Full Restart	A restart will occur when: a) 3 or more of the field stops in the first corner following the start of the race.

KART CONTACT

OFFENCE/INFRINGEMENT	RULE No.	ACTION/PENALTY	RULE DESCRIPTION
Causing Kart contact and other kart loses a position	14.12	5 point penalty or 2 positions	A Driver who causes a kart to make contact with another kart or who drives or acts in a manner that could endanger them or any other persons may be penalised.
Causing Kart contact and causing other kart to DNF	14.12	10 point penalty or 5 positions	
Deemed to deliberately displaced or spun another kart (1st Offence)	14.13	Exclusion of the race meeting	A Driver that is deemed to have deliberately displaced or spun out a fellow competitor shall receive: A penalty of exclusion of race meeting for first offence. Second offence in a 12 month period shall be 3 months suspension and any subsequent offence within a 12 month period shall be a 12 month suspension.
Deemed to deliberately displaced or spun another kart (2nd Offence within 12 months)	14.13	3 month suspension	
Deemed to deliberately displaced or spun another kart (any subsequent Offence within 12 months)	14.13	12 month suspension	

Version 1_Approved

GENERAL

OFFENCE/INFRINGEMENT	RULE No.	ACTION/PENALTY	RULE DESCRIPTION
Passing under yellow flag or light	17.2	5 point penalty or 2 positions	Yellow - hold position. Do not pass any karts until past the next Flag Marshall point not showing a yellow flag/light.
Disobeying a Black Flag	17.5	loss of heat points or deemed non finisher	Black Flag- Faulty equipment or has broken rules of racing must leave track with caution. Board with number can be shown.
Not attending Scales or fuel testing when requested by an official	13.18	loss of heat points or deemed non finisher	All Drivers and crews shall obey the instructions of an Official.
Disobeying direct order from steward whilst on track and/or refusing to co-operate with direct order of an official		Exclude from Race Meeting	
Not attending Drivers Brief	13.2	Exclusion from Race Meeting	Before racing shall commence on any race day a Drivers briefing should be held. At this briefing, comments from the Chief Steward, Starter and other relevant details shall be discussed. Driver's Representatives shall be appointed at this time. Probationary Drivers, Rookie and Midget Drivers should be addressed separately. Questions from Drivers should be invited.
Not removing kart from track as requested by an official	14.3	loss of heat points + additional 5 point penalty or deemed non finisher	It is the Drivers responsibility to get their unit on and off the track as requested by the host Club and Officials of the day.
Use of hands, feet, any part of the body or get outside assistance.	14.14	loss of heat points or deemed non finisher	No kart shall be restarted during the running of a race once the race has been started. Clutch driven karts are exempt provided the driver has not left the seated position and assistance is not received to restart. No use of feet, hands or any part of the body is allowed. If the kart does not start immediately and move under its own power, it must be removed from the track as per all classes. Assistance of any kind to restart karts during a race is not allowed. Penalty loss of points for heat. Any driver that continues to attempt to restart their kart with field approaching for the next lap will lose all points for that heat and a further penalty shall be imposed, "recommend 5 points". Midget class can be restarted if it can be safely done. Rookie class can only be restarted on the first lap unless there are less than 10 karts participating and if it can be safely done.
Continuing to attempt to restart kart with field approaching for next lap	14.14	loss of heat points + additional 5 point penalty or deemed non finisher	
One Kart left on track racing	14.20	Wave chequered flag	The Chief Steward shall declare a race if there is only one (1) kart left racing in a race.
Dangerous re-entry to the track	14.23	5 points penalty Or 2 positions	If whilst racing, the Driver has to exit the course, they may re-enter the track at the nearest possible point, provided they do not gain an advantage and do so safely and do not impede any other Drivers
Dangerous re-entry to the track impacting other drivers		10 point penalty or 5 positions	
Dangerous re-entry to the track gaining an advantage		10 point penalty or 5 positions	
Use of cut through/ roll through in full once the race has commenced	14.24	loss of heat points or deemed non finisher	Any driver not taking the track proper of the day maybe subject to a penalty. Once the race commences, any driver using the track cut through / roll through in full will be excluded from the race. Where possible the driver will receive the black flag during the race.

Version 1_Approved

Crossing the track whilst a race is in progress and no safety issue	14.25	loss of heat points + additional 5 point penalty or deemed non finisher	No person shall use the track as a thoroughfare or cross the track whilst a race is in progress, unless to assist with a potential safety issue.
Deliberately lifting front wheels with a pulling action	14.26	loss of heat points or deemed non finisher	A Driver shall not deliberately lift their front wheels with a pulling action on the steering wheel. This action is different to the bouncing of a kart
Not passing over finish line seated and kart under its own power	14.27	loss of heat points or deemed non finisher	To be classed a finisher the Driver must pass fully over the finish line, on the track proper, seated in the kart with the kart under its own power
Racing After the Chequered Flag	14.28	loss of heat points or deemed non finisher	No Driver shall continue racing after the chequered flag is waved. All Drivers shall keep the kart circulating at a reasonable speed immediately after the chequered flag as not to impede other finishers.
Driving kart in opposite direction of the race being run	14.29	loss of heat points or deemed non finisher	At no time shall a Driver permit their kart to be pushed or driven in the opposite direction of the race being run.
Speeding into the in grid	14.31	loss of heat points or deemed non finisher	No Driver shall enter the in-grid at speed, such as to endanger other drivers, crews or officials
(if Required) Driver not remaining seated or on their side pods or tyres on the Ingrid until all clear has been given	14.31 a	1st Offence Written warning 2nd Offence at same event, loss of heat points or deemed non finisher	All drivers are to remain seated in or on their kart (i.e. in their seat, atop the back of their seat, or on one of their side pods or tyres) until all clear for that race has been given by the Ingrid Marshall. This rule to be compulsory for all title events and optional for club events and its implementation to be announced at driver's briefing prior to the commencement of racing.
Running an engine in without due care during a race	14.34	loss of heat points or deemed non finisher	Any driver running in engines without due care may be penalised.

RED FLAGS/RACE STOPPAGES

OFFENCE/INFRINGEMENT	RULE No.	ACTION/PENALTY	RULE DESCRIPTION
Disobeying a Red Flag	17.3	loss of heat points or deemed non finisher	Red – In the event of a Red light/flag, the drivers shall raise their hand, reduce their speed safely to a slow pace and return to the finish line, where they will stop to one side of the track. If the accident is between themselves and the finish line then they must safely stop their kart and not pass the accident. A kart rollover will automatically bring about a red flag.
Driver has had a rollover or a potential serious injury at any time	14.15	Can't compete in that race. Also, must have been cleared by St John or State Ambulance Service Or after a minimum of 30 minutes from First Aider	Any driver who as a result of a rollover or potentially serious injury shall not be able to compete in any restart of that race, nor shall they be able to compete in any other immediate class of racing, until they have been cleared by St John or State Ambulance Service or have been observed for a minimum of 30 minutes by First Aid personnel to not have any residual effects of rollover or injury. Any person refusing assessment by First Aid personnel will be excluded from further participation in the race meeting and will be required to provide AIDKA Secretary with a medical clearance from a recognised medical practitioner to confirm the person is fit to compete in motorsport. Any person, who as a result of a rollover or potentially serious injury (Red Flag/Race Stoppage), will not receive any points for that heat.
Refused assessment by First Aid personnel	14.16	Not able to compete at that	Any driver that is: a) taken to hospital; or b) suspected of a concussion type head injury by St Johns (or state) Ambulance

Version 1_Approved

Not Cleared by First Aid Personnel Taken to Hospital Suspected of concussion		event or any other event until they produce a medical certificate to AIDKA Secretary	Service or the race meeting nominated First Aiders in conjunction with the Chief Steward, will take no further part of that meeting, any other AIDKA race meetings or Education days until reviewed by a Medical Practitioner and a medical certificate produced to the AIDKA Secretary. (Entry to be made into Logbook). Medical certificate must contain the words "fit to compete in motorsport"
Red Light or race stoppage **before** all drivers have completed first lap	14.17	Full restart minus driver causing stoppage	All restarts are to go back to the lap prior to the race stoppage. Only Drivers that are recorded as completing the lap prior will be eligible to restart provided, they have not been a kart which has rolled over or deemed to have caused the race stoppage
Red Light or race stoppage **after** all drivers have completed first lap	14.18	Indian File Restart minus driver causing stoppage	Restarts after 1 lap will be Single Indian File
Driver involved in a race stoppage	14.19	Refer to 14.12 for penalty	Additional drivers involved in a race stoppage may be penalised at the discretion of the Chief Steward at all AIDKA Events
More than 2/3 of race completed before race stoppage	14.21	Declare the race. Results will be last completed lap. Driver causing stoppage will be deemed a non-finisher	If 2/3rds of the race has been completed, the race will be declared. Race results will be the last completed lap. The kart(s) deemed the cause of a Race Stoppage will be recorded as a non-finisher.

TRANSPONDERS

OFFENCE/INFRINGEMENT	RULE No.	ACTION/PENALTY	RULE DESCRIPTION
Transponder not fitted to kart on outgrid.	13.13.6	Excluded from start of race	Every driver for which transponders are mandatory must have a functioning MYLAPS Karting compatible transponder fitted to their kart for the purpose of timing/scoring during each race at an event. Drivers who fail to comply will not be permitted to enter the racetrack.
Transponder has: 1. recorded a lap (form up or race) 2. And transponder is mounted to kart	13.13.8.a	Included in results if officials **can** validate the finishing position Awarded last finishing place if officials **can't** validate finishing position	If the Transponder has recorded a lap in that race after leaving the out grid (form up lap or race lap) and the transponder is mounted to the kart, the driver will be included in race results, on the proviso that the timing system operator and/or the chief steward or any official approved by the chief steward can validate the final position of the driver. Where the final result cannot be determined by any of those officials, the driver will be awarded last place points
Transponder has: 1. Not recorded a lap (form up or race) 2. And transponder is mounted to kart 3. And proven to be functioning on the in grid.	13.13.8 b	Included in results if officials **can** validate the finishing position Awarded last finishing place if officials **can't** validate finishing position	If the Transponder has not recorded a lap after leaving the out grid (form up lap or race lap) and the transponder is mounted to kart, and is proven to be functioning on the in grid, the driver will be included in race results, , on the proviso that the timing system operator and/or the chief steward or any official approved by the chief steward can validate the final position of the driver. Where the final result cannot be determined by any of those officials, the driver will be awarded last place points
Transponder is: 1. Showing as not functioning on the in grid 2. And/or no laps recorded (form up or race) 3. And/or Transponder is not attached to kart	13.13.8 c	Deemed a non-finisher	If the Transponder is showing as not functioning on the in grid and/or no laps (form up lap or race lap) have been recorded and/or the transponder is not attached to the kart driver will be deemed a non-finisher for that race.

Version 1_Approved

Failure to notify officials that changed transponder along with details prior to 1 full race before their next race scheduled	13.13.10	Deemed a non-finisher	If for any reason a driver has to change their transponder at any time during an event, they must notify the Lap Scorers and/or Chief Steward the change of details before participating in any other races at that event. This must be done at least 1 full race before that driver is scheduled to race.
Transponder system fails during a race	13.13.11	Stop the race. Order of karts will be recorded at last point possible to determine position of all karts.	Should at any time during a race the transponder system fails the race will be stopped. The order of karts will be taken at the last point at which it was possible to determine the race position of all karts in that race. This will be final and not subject to protest or appeal.

TRANSPONDER MATRIX

TRANSPONDER RECORDED A READING	TRANSPONDER ON KART AFTER RACE	TRANSPONDER FLASHING GREEN AFTER RACE	POINTS AWARDED IF POSITION CAN BE VERIFIED
YES	YES	NO	YES
YES	NO	-YES	NO
NO	YES	-NO	YES
NO	NO		NO
NO	YES		NO

WEIGHTS

21.1 Minimum weights for Driver combined with Kart are set out in the Table below:

Class	Combined Weight
Midgets/Rookies	No combined weight
J Junior Light	95kg
J Junior Heavy	115kg
KT Light	120kg
KT Medium	140kg
KT Heavy	160kg
KT Twin	160kg
Statesman	140kg
125cc Light	140kg
125cc Medium	160kg
125cc Heavy	180kg
100cc Open	140kg
200cc Open	160kg
Outlaw	175kg

OFFENCE/INFRINGEMENT	RULE No.	ACTION/PENALTY	RULE DESCRIPTION
Combined kart and driver weight is underweight	21.4	Loss of points for heat	A person who contravenes Rule 21.1 (Table) will be guilty of an offence and be liable to penalty. The offence shall be Appendix "B" Penalty C (loss of points for heat).
Exceeding maximum kart weight	21.5	Excluded from start of race	Maximum kart weight can only be determined before the start of the race as the kart is presented on the out grid. An official, weigh Marshall or Driver can request that mud be scraped from a kart before or after weighing if they think it will have an effect on the weight of the kart or combined weight. The driver only with the use of a scraper has up to 2 minutes with the presence of an official to remove any excess dirt. If the kart fails to comply the driver will be excluded from the race. **Junior Classes** A J Junior driver may race in 1 weight class only on the day.

Version 1_Approved

			Maximum kart weight for J Junior Heavy when a Light Class is offered shall be 70kg or a combined weight of 105kgs when a light class is not offered. **KT Classes** Maximum Kart weight for KT Medium and KT Heavy classes when a Light class is offered shall be 75kg **125cc Classes** Maximum Kart weight for 125cc Medium and 125cc Heavy when a Light Class is offered shall be 85kg. If numbers do not allow for 3 split classes, then clubs may elect to run 125cc Light and Combined class at 160kg or Combine all classes at 150kg. No maximum kart weight when all classes are combined
Carrying additional weight on person	21.7	3 month suspension	No additional weight is to be carried on person. Penalty to be imposed, immediate loss of licence for up to 3 months.
Rib vest is overweight of 2kg	20.1 f	3 month suspension	Rib vest must be designed specifically for kart use and may not exceed 2kg.

SMOKING - For full AIDKA Smoking Policy please refer to AIDKA website.

OFFENCE/INFRINGEMENT	RULE No.	ACTION/PENALTY	RULE DESCRIPTION
Any person on premises smoking in a prohibited area.	12.7	Ask to cease smoking or vaping and direct to appropriate area	This rule applies to any person who is on the premises. Smoking & Vaping are banned at or within 10 metres of the following areas at any club's premises at all times during an event. •In the Clubhouse •Any enclosed building or on any structure at the venue. •Any club owned, hired or borrowed vehicles, plant or equipment •The pit area, race arena and red zones. •Outdoor spectator grandstands or designated seating areas •Outdoor food and drink outlets or dining areas •Child designated areas, including playgrounds. Any person found to be in breach of the above rule may be asked to leave the premises.
Continual breach of smoking rules during an event		Exclude person from premises	

DRUGS AND ALCOHOL - For full AIDKA Alcohol and Drug Policy please refer to AIDKA website

OFFENCE/INFRINGEMENT	RULE No.	ACTION/PENALTY	RULE DESCRIPTION
Drug and/or Alcohol positive test or refusal within 10 years FIRST OFFENCE	12.4	Excluded from event and a minimum of 3 months suspension	First Offence: exclusion from the AIDKA affiliated Event where a positive test is recorded or refused. Suspension from participating at any AIDKA affiliated Event for a period of not less than 3 calendar months
Drug and/or Alcohol positive test or refusal within 10 years SECOND OFFENCE	12.5	Excluded from event and a minimum of 12 months suspension	Second Offence: exclusion from the AIDKA affiliated Event where a positive test is recorded or refused. Suspension from participating at any AIDKA affiliated Event for a period of not less than 12 calendar months
Drug and/or Alcohol positive test or refusal within 10 years SUBSEQUENT OFFENCES	12.6	Excluded from event and a minimum of 5 years suspension	Any subsequent offence: exclusion from the AIDKA affiliated Event where a positive test is recorded or refused. Suspension from participating at any AIDKA affiliated Event for a period of not less than 5 calendar years.
Have been excluded and suspended for Drug and Alcohol offence	11.1	Will be excluded from attending any AIDKA affiliated club premises	Members who have been expelled for breaches of alcohol and drug, verbal, physical, behavioural or intimidating an official or fellow competitor shall be excluded from attending any AIDKA affiliated club premises.

ILLEGAL MOTORS, EQUIPMENT OR FUEL

FIRST OFFENCE Illegal motors, equipment or fuel	26.4	Excluded from event and results plus additional penalty up to 6	Drivers of illegal motors, fuel or equipment will be suspended from driving at AIDKA affiliated Clubs for: a) up to 6 calendar months for the first offence.

Version 1_Approved

		months to be decided by Technical Committee	b) minimum of 3 calendar months, up to 12 calendar months for each subsequent offence. Penalty to be decided by AIDKA Technical Committee.
SUBSEQUENT OFFENCE Illegal motors, equipment or fuel		Excluded from event and results plus additional penalty of 3 months up to 12 months to be decided by Technical Committee	

BEHAVIOUR

11 Members who have been suspended for driving or technical breaches of the rules shall be permitted to participate whilst under suspension in other club activities, officiating or assisting other members in the pit area.

11.1 Members who have been expelled for breaches of alcohol and drug, verbal, physical, behavioural or intimidating an official or fellow competitor shall be excluded from attending any AIDKA affiliated club premises.

OFFENCE/INFRINGEMENT	RULE No.	ACTION/PENALTY	RULE DESCRIPTION
Verbal abuse or intimidation of official, fellow driver, crew or participant	11.3	Up to 3 months suspension from AIDKA sanctioned events	No Driver, crew or participant shall verbally or physically abuse or intimidate an official or fellow competitor, crew, or participant. Any person acting in this manner will be guilty of an offence and shall surrender their Logbook and be liable to a penalty as per Rule 11.8.
Subsequent Offence		Minimum of 3 months up to 12 months suspension from AIDKA sanctioned events	
Physical abuse of official, fellow driver, crew or participant	11.3	Minimum of 3 months up to 6 months suspension from AIDKA sanctioned events	No Driver, crew or participant shall verbally or physically abuse or intimidate an official or fellow competitor, crew, or participant. Any person acting in this manner will be guilty of an offence and shall surrender their Logbook and be liable to a penalty as per Rule 11.8.
Subsequent Offence		12 months suspension from AIDKA sanctioned events	
Acting in an unsportsmanlike manner	11.4	Up to 3 months suspension from AIDKA sanctioned events	Any AIDKA licence holder or affiliated Official at any sanctioned AIDKA event will conduct themselves in a professional sportsman like manner at all times. This is particularly important when in the presence of members of the public. Any person found guilty of this offence could be liable to a penalty as per rule 11.8.
Subsequent Offence		Minimum of 3 months up to 12 months suspension from AIDKA sanctioned events	
Breaching the AIDKA Code of Conduct	11.5	Up to 3 months suspension from AIDKA sanctioned events	Australian Independent Dirt Kart Association encourages good sportsmanship at all levels of competition. AIDKA Codes of Conduct must be adhered to by all members. Please refer to AIDKA code of conduct. Any person found guilty of this offence could be liable to a penalty as per rule 11.8.
Subsequent Offence		Minimum of 3 months up to 12 months suspension from AIDKA sanctioned events	
Driver 18 years and older is deemed had opportunity to control or influence the behaviour of their pit crew	15.8	Same Behaviour penalty as their pit crew received	Senior Drivers will be responsible for the behaviour of their respective Pit Crews including crew members that have gained access to the pits with a Casual pit pass. Any violation will be charged directly to the Driver &/or crew.
Drivers underage of 18 are not responsible for any adult involved with them.	15.9	N/A	Junior Drivers shall not be responsible for any adult involved with them. That adult will be responsible for their own behaviour.

Version 1_Approved

11.6 If a Driver, crew or participant is excluded from an event, they have 30 minutes to pack up their belongings and depart the premises. A Drivers Representative or appointed Official must be present during this 30-minute period.

11.8 Penalty for any behaviour rule shall be:

- First offence suspended from any organised AIDKA race meeting or sanctioned event for:
  a) A minimum period of 3 months/ up to 6 months for physical abuse or,
  b) Up to 3 months for verbal abuse, unsportsmanlike behaviour or breaching AIDKA Code of Conduct.
- For any subsequent offence of any Behaviour rule, suspension from any organised AIDKA race meeting or sanctioned event for:
  a) 12 months for physical abuse; or,
  b) a minimum period of 3 months/ up to 12 months for verbal abuse, unsportsmanlike behaviour or breaching AIDKA Code of Conduct

AIDKA TRACK SAFETY

Rule #

Appendix C Please find all details for safety standards for tracks in the Track Operation Manual (TOM) available on the AIDKA website or your local club.

The AIDKA National Track and Safety Officer and National Executive reserves the right to vary these requirements at any time in the interest of safety.

AIDKA LIST OF FEES

Rule #

Appendix D

Senior Drivers Licence		**$325.00**
Junior Drivers Licence (As per Rule 6.4)		**$215.00**
Restricted Drivers Licence:	Senior	**$162.50**
	Junior	**$107.50**

These can only be issued to race from 1st September for a maximum of 6 race meetings. Holders of Restricted Licences are ineligible to race at any State, Territory or National Titles.

Senior Official Licence		$ 80.00
Senior Official Licence (each club receives)		6 x free
Single Event Licence (see Rule 6.7)	Junior/Senior	**$60.00**
	Midgets/Rookies	$25.00
Pit Crew		$80.00
Casual Passes		$10.00
Novice Driver Pass		$20.00
Re-issuing of logbook		$ 50.00
Protest Fee		
Rule 10.1a		**$300.00**
Rule 10.1b		$300.00
Rule 10.1c		**$300.00**
Appeal Fee		
Rule 10.8 (Cash or Debit/Credit card ONLY)		$400.00
Appeal Administration Fee (Non-refundable)		$200.00
Tribunal Hearing Fee (maximum)		$100.00
Initial Joining Fee (includes 1st years affiliation fee)		$3000.00
Annual Affiliation Fee (payable before 1st Feb each calendar year)		$1000.00
Track Licence		$1000.00

Payable on or before the 1st February each calendar year. Executive to approve any delay with this payment (must be paid prior to the track inspection or any racing on the track for that calendar year).

Fee for Demonstration	$180.00
Administration Holding Fee	$250.00

Maximum 12 months (available only to clubs who do not wish to run any race meetings/Practice or education days)

Secretary Wage	25 hrs per week (Level 2 Year 2)
Maximum Title nomination for Senior/Junior at a Title	**$160.00**

Host Club $100 / AIDKA Levy $60

AIDKA Nomination Levy (Non Title Events)	$3.00 per nomination

JUNIOR TRAINING PROGRAM

New #

Appendix E

1) Participants to be aged between 7 and 15 years of age for the purpose of education and training.

2) All Participants must fill and pay for CASUAL DAY LICENCE for each day the participate as a minimum requirement.

3) There is to be a maximum of 12 training days per racing year for each participating club.

4) Junior Training Program is to be run the same day, BUT prior or conclusion to a race meet or education day. The Program is not to be combined with a race meet or education day.

5) All race day and track requirements are to be adhered to before commencement of Training Program.

6) The Junior Training Program must comply to all requirements under Rules 13 – 13.19 of the AIDKA Rule book.

7) There shall be a maximum of 6 karts on the track at any one time.

8) All karts must meet all requirements of all the rules under Rules 22 – 22.14

9) All engines must be either AIDKA approved engines for Junior drivers or 4 Stroke engines 10 horsepower or less. Participants 7 to 9 years of age must use an AIDKA approved restrictor. Clutches may be used.

ENGINE SEALING METHOD

Appendix F Engine Sealing Method: All Engines at all times must be fitted with a sealing nut or nuts appropriate for respective type of engine and class.

(a) **Yamaha KT100J** 1 x sealing nut must have a minimum 3 mm hole and also 1 x cylinder head fin to allow fitment of a seal when required. And or the engine may also be fitted with 2 x Head Sealing nuts (with minimum 3mm holes) to allow sealing between the two nuts.

(b) **Yamaha KT100S** 1 x head sealing nut must also have a minimum 3 mm hole in a cylinder head fin to allow fitting of a seal when required, or the engine may also be fitted with 2 x Head Sealing nuts (with minimum 3mm holes) to allow sealing between the two nuts. Replace 1 x cylinder retaining nut (cylinder to crankcase) with an internal hex cylindrical nut. To be fitted by the competitor or engine builder during assembly on the drive side for ease of checking.

(c) **125cc Engines** Where possible 2 x head studs to be replaced by sealing studs. And or the engine may also be fitted with 2 x Head Sealing nuts (with minimum 3mm holes) to allow sealing between the two nuts. Rotax 125Max must have 1 cylinder stud, head and reed block bolt drilled.

(d) **100cc / 200cc Open Engines** with integral cylinder and head nuts. -1 head sealing nut drilled and a hole in a cylinder head fin to allow for fitting of seal or 2 sealing nuts drilled to allow sealing between the two nuts. Engines with head studs independent of cylinder studs, must have the cylinder sealed to the crankcase with a hole in the top of one stud and a hole in the crankcase to allow sealing between the two holes.

(e) **Outlaw Engines** must have a way a seal can be fitted. You must either have the ability to fit a seal between the barrel and cases and or head and cases. At no time during a race meeting can the barrel be removed once the seal is fitted.

(f) At Title Events single engine classes will be allocated 2 engine seals maximum; twin engine classes will be allocated 4 engine seals maximum.

(g) Failure to present the engine with the required Sealing methods or components at Title Events will result in the equipment / engine presented being deemed illegal

AIDKA Code of Conduct

Australian Independent Dirt Kart Association encourages good sportsmanship at all levels of competition. Here is a guide to Codes of Conduct. If you have any questions about the AIDKA Code of Conduct, please contact AIDKA secretary at ***secretary@aidka.com.au*** or visit the ***www.playbytherules.net.au*** for advice.

- Adhere to AIDKA Rules & Regulations & Policies.
- Act within the rules of the sport at all times.
- Treat all participants in your sport with respect.
- Control your temper.
- Respect the rights, dignity and worth of all participants.
- Be a good role model.
- Respect the decisions of officials.
- Be environment conscious.

For Racers:

- Always comply with the rules
- Always compete to the best of your ability, with honor and integrity.
- Avoid arguing with stewards and officials
- Treat all competitors as you would like to be
- Avoid the use of coarse or derogatory language.

For Officials:

- Be impartial, consistent and objective
- Place the safety and welfare of all participants above all else.
- Ensure the spirit of competition is maintained.
- Be understanding and co-operative in the interpretation and application of rules and penalties.
- Condemn unsporting behavior and promote respect for all competitors.

For Parents:

- Focus upon the child's performance rather than the overall outcome of the event.
- Teach children that an honest effort is as important as victory.
- Encourage your children to follow the rules and respect decisions of officials and stewards.
- Remember that children are involved in Dirt Karting for their enjoyment – not yours.
- Set a good example.
- Don't be an ugly parent.

Social Media:

AIDKA encourages participation in online social media in a positive manner. The accessible nature of the internet, however, can lend itself to the posting of threatening and derogatory material in the heat of the moment. Once your thoughts and comments are published to the internet, they are visible to the world - and they are permanent. AIDKA takes all cases of cyber bullying seriously and will treat online matters as it would 'real world' Bullying: Breaching the code of conduct or bringing the sport into disrepute online can lead to serious consequences, including tribunals, suspensions and the cancellation of the offender's AIDKA Licence.

AIDKA reminds all members, you run by the AIDKA code of conduct at all AIDKA sanctioned events.

AIDKA

AUSTRALIAN INDEPENDENT DIRT KART ASSOCIATION INC.

www.aidka.com.au